REQUIREMENTS FOR PREPARATION OF INSTRUMENT CALIBRATION PROCEDURES (ICP)

Prepared By
MEASUREMENT SCIENCE DIRECTORATE
NAVAL WARFARE ASSESSMENT DIVISION
CORONA, CA 91718–5000

THIS PUBLICATION SUPERSEDES NAVAIR 17–35TR–4
DATED 1 AUGUST 1990

DISTRIBUTION STATEMENT C. DISTRIBUTION AUTHORIZED TO U.S. GOVERNMENT AGENCIES AND THEIR CONTRACTORS TO PROTECT PUBLICATIONS REQUIRED FOR OFFICIAL USE OR FOR ADMINISTRATIVE OR OPERATIONAL PURPOSES ONLY. OTHER REQUESTS FOR THIS DOCUMENT SHALL BE REFERRED TO NAVY MEASUREMENT SCIENCE DIRECTORATE, NAVAL WARFARE ASSESSMENT DIVISION, P.O. BOX 5000 CORONA, CA 91718–5000

TR–04

DESTRUCTION NOTICE– FOR UNCLASSIFIED, LIMITED DOCUMENTS, DESTROY BY ANY METHOD THAT WILL PREVENT DISCLOSURE OF CONTENTS OR "RECONSTRUCTION OF THE DOCUMENT."

DEPARTMENT OF THE NAVY METROLOGY AND CALIBRATION PROGRAM

1 JULY 1997

FOREWORD

1. This document provides guidelines regarding the preparation of Navy Instrument Calibration Procedures (ICPs). All elements of the calibration procedure development process are covered including style, format, and technical content

2. The objective of this document is to achieve uniformity in the format and content of ICPs prepared for use in the Navy Metrology and Calibration (METCAL) program.

3. This document will be revised, amended, and updated as required. Corrections or comments concerning this document are invited and should be addressed to:

Measurement Science Directorate
Naval Warfare Assessment Division
P. O. Box 5000
Corona, CA 91718–5000

LIST OF EFFECTIVE PAGES

The purpose of this list is to identify the pages in this document affected by any content changes made since the previous release of the document.

NOTE: On a revised page, with the exception of the Title, the A, and the i pages, the technical changes are indicated by a vertical line in the outer margin of the page.

Page No.	Revision*	Page No.	Revision*	Page No.	Revision*
Title	R	59 to 63	R		
A	R	64 (blank)	0		
i	0	65 to 93	0		
iii to vi	0	94 (blank)	0		
1	R	95 to 109	0		
2 to 4	0	110 (blank)	0		
5, 6	R	111 to 122	0		
7	0	A–1 to A–3	0		
8 (blank)	0	A–4 (blank)	0		
9 to 19	0	A–5 to A–13	0		
20 (blank)	0	A–14 (blank)	0		
21 to 28	0	A–15, A–16	0		
29 to 31	R	B–1	0		
32 to 39	0	C–1 to C–8	0		
40 (blank)	0	D–1	0		
41 to 44	0	E–1 to E–5	0		
45	R	F–1 to F–5	0		
46 to 49	0	G–1 to G–2	0		
50 (blank)	0	H–1 to H–3	0		
51 to 53	0				
54 (blank)	0				
55 to 58	0				

* Zero in this column indicates an original page.
"R" in this column indicates a revised page.

TABLE OF CONTENTS

Section		Page
1	INTRODUCTION	1
1.1	Scope	1
1.2	Purpose of ICPs	1
1.3	Reference Documents	1
1.3.1	References	1
1.3.2	Order of Precedence	1
1.4	Acronyms And Abbreviations	1
2	GENERAL REQUIREMENTS	2
2.1	ICP Applicability	2
2.2	Applicable Documentation	2
2.3	Personnel Health and Safety Considerations	2
2.4	User Considerations	3
2.5	Style and Format	3
2.5.1	Style	3
2.5.2	Format	4
2.5.3	Action Verbs and Terms	5
2.5.4	Terms, Abbreviations, and Units	5
2.5.5	Warnings, Cautions, and Notes	6
2.5.5.1	Warnings	6
2.5.5.2	Cautions	6
2.5.5.3	Notes	6
2.5.6	Figures and Tables	6
2.5.7	Formulas	6
3	DETAILED REQUIREMENTS FOR ICP PREPARATION	7
3.1	ICP Composition	7
3.2	ICP Boiler Plate	7
3.3	Preparation of Front Matter	7
3.4	Preparation of Section 1 (Introduction and Description)	12
3.4.1	Purpose in ICP	12
3.4.2	Test Instrument Identification	12
3.4.3	Introductory Information	12
3.4.4	Calibration Description (Table 1)	12
3.4.4.1	TI Characteristics Requiring Test or Verification	13
3.4.4.2	TI Performance Specifications and Test Tolerances	15
3.4.4.3	Test Method	15
3.4.5	Procedure for Preparation of ICP Section 1	17
3.4.5.1	Test Instrument Identification and Introductory Information	17
3.4.5.2	Table 1	17
3.4.6	Examples of Section 1	17
3.5	Preparation of Section 2 (Equipment Requirements)	29
3.5.1	Purpose in ICP	29
3.5.2	Procedure for Preparation of ICP Section 2	29
3.5.2.1	Item	29
3.5.2.2	Minimum Use Specifications/Test Accuracy Ratio Requirements	29
3.5.2.3	Calibration Equipment Selection	31
3.5.2.4	Listing of Accessories	31
3.5.3	Examples of Section 2	31

TABLE OF CONTENTS
(Continued)

Section		Page
3.6	Preparation of Section 3 (Preliminary Operations)	43
3.6.1	Purpose in ICP	43
3.6.2	Warnings, Cautions and Notes	43
3.6.3	Special Environmental Conditions	45
3.6.4	Preliminary Checks and Inspections	45
3.6.5	Identification of TI Controls and Control Settings	45
3.6.6	Interconnection Instructions	46
3.6.7	Procedure for Preparation of ICP Section 3	46
3.6.8	Examples of Section 3	46
3.7	Preparation of Section 4 (Calibration Process)	59
3.7.1	Purpose in ICP	59
3.7.2	General Requirements	59
3.7.2.1	Clarity and Degree of Detail	59
3.7.2.2	Division of Calibration Process and Test Sequence	59
3.7.2.3	Test Methods	59
3.7.2.4	Use of Diagrams, Illustrations and Sample Calculations	59
3.7.2.5	Identification of TI Controls and Control Settings	59
3.7.2.6	Interconnection Instructions	59
3.7.2.7	Safety Considerations	59
3.7.2.8	Adjustment Instructions	59
3.7.2.9	Verification and Corrective Action	60
3.7.2.10	Calibration Test Points	60
3.7.2.11	Designation and Expression of TI Performance Limits	61
3.7.3	Procedure for Preparation of ICP Section 4	62
3.7.3.1	Use of Report of Calibrations/Correction Chart	62
3.7.4	Examples of Section 4	63
3.8	Preparation of Calibration Checklist	95
3.8.1	Purpose in ICP	95
3.8.2	Procedure for Calibration Checklist Preparation	95
3.9	Appendices	109
3.10	General ICPs	117
3.10.1	Test Instrument Identification	117
3.10.2	Performance Specifications	117
3.10.3	Identification of TI Controls and Control Settings	117
3.10.4	Calibration Checklists	117
3.11	System Calibration Procedures	121
3.12	On–site And/Or In–place Calibration Procedures	121
3.13	Preparation Of ICP Outline	121
4	Calibration Procedure Review And Evaluation	122
4.1	Scope	122
4.2	Performance Of Reviews	122
4.3	Review Checklist	122
4.4	Bench Evaluations	122
4.5	Submission Of ICP Drafts	122
4.5.1	ICP Draft Submission Format	122
4.5.2	ICP Submission Checklist	122

ILLUSTRATIONS

Figure		Page
1	Sample ICP Title Page	9
2	Sample ICP “A” Page	10
3	Sample ICP Table of Contents	11
4	Decision Chart	14
5	Examples of ICP Section 1:	18
5A	Digital Nanovoltmeter	19
5B	Oscilloscope	21
5C	Scalar Network Analyzer	23
5D	Angle Blocks	25
5E	Diesel Generator Control Panel Diesel Exhaust Temperature SSBN 726 Class Submarines	26
5F	Vibration Test Set	27
6	Examples of ICP Section 2:	32
6A	Scalar Network Analyzer	33
6B	VOR/ILS/MB Ramp Test Set	35
6C	Peak Power Meter System	37
6D	Hydraulic and Pneumatic Pressure Gages and Switches	41
7	Examples of Warnings, Cautions, and Notes:	
7A	WARNING	44
7B	CAUTION	44
7C	NOTE	44
8	Examples of ICP Section 3:	46
8A	Peak Power Meter System	47
8B	Angle Blocks	49
8C	B.I.M. Blades Check and Fill Units	51
8D	VOR/ILS/MB Ramp Test Set	55
8E	Ship Service Turbine Generator (SSTG) Tachometer System	57
9	Examples of ICP Section 4:	63
9A	Digital Nanovoltmeter	65
9B	Angle Gage Blocks	69
9C	B.I.M. Blades Check and Fill Units	75
9D	Scalar Network Analyzers	79
9E	AC Calibration System	85
10	Examples of ICP Checklists:	96
10A	Digital Nanovoltmeter	97
10B	Angle Gage Blocks	99
10C	B.I.M. Blades Check and Fill Units	101
10D	Scalar Network Analyzers	103
10E	AC Calibration System	105
11	Examples of ICP Appendices:	109
11A	Dimensional Tolerances For Critical Portions Of Military Type N Connectors Used In Precision Measurement Equipment (Appendix A)	111
11B	Feedthrough Termination Fabrication (Appendix A)	112
11C	Tuning Frequency Accuracy Worksheet (Appendix A)	113
11D	Pressure Unit Conversion Factors(Appendix B)	114
11E	Power Linearity Worksheet (Appendix B)	115
11F	Power Measurement Accuracy Worksheet (Appendix C)	116
12	Example of Section 1 of a General Procedure	118
13	Example of Appendix A of a General Procedure	119
14	Example of Section 3 of a General Procedure	120

APPENDICES

Appendix		Page
A	NAVAIR 17–20 ICP–000	A–1
B	Multiples of SI Units	B–1
C	Authorized Abbreviations	C–1
D	Reference Documents	D–1
E	ICP Boiler Plate Forms	E–1
	E–1 Boiler Plate for Section 1	E–1
	E–2 Boiler Plate for Section 2	E–2
	E–3 Boiler Plate for Section 3 (Electrical/Electronic)	E–3
	E–4 Boiler Plate for Section 3 (Mechanical)	E–4
	E–5 Boiler Plate for Section 4	E–5
F	ICP Review Checklist	F–1
G	Acronyms and Abbreviations	G–1
H	Instrument Calibration Procedure (ICP) Submission Checklist	H–1

SECTION 1 – INTRODUCTION

1.1 SCOPE

The purpose of this document is to standardize the format and content of Instrument Calibration Procedures (ICPs) prepared for use in the Navy Metrology and Calibration (METCAL) program. The document provides guidance covering all elements of the calibration procedure development process including style, format, and technical content. In addition, guidelines are provided for performing ICP reviews to determine technical adequacy and conformance to prescribed requirements. The information contained herein pertains primarily to manually performed (non–automated) calibration procedures.

1.2 PURPOSE OF ICPs

Calibration procedures provide essential instructions and information that enable calibration personnel to determine whether the instrument being calibrated (herein called Test Instrument or TI) is operating within prescribed tolerances or performance criteria. Calibration procedures also serve the following purposes:

a. To establish and maintain uniformity of calibration test methodology and agreement of calibration results among Navy calibration laboratories.

b. To provide detailed instructions concerning calibration equipment setup and connections, required measurement standards and ancillary equipment, test instrument connections, control adjustments, tolerance values and test criteria, performance of the various tests, and interpretation of test results.

c. To serve as training and reference material.

1.3 REFERENCE DOCUMENTS

1.3.1 **References**. Specifications, standards, and other publications referenced in this document, and/or which are directly applicable to the material presented herein, are listed in Appendix D.

1.3.2 **Order of Precedence**. In the event of a conflict between the text of this document and the references cited herein (except for related associated detail specifications, specification sheets or standards), the text of this document takes precedence for Navy Instrument Calibration Procedures. Nothing in this document, however, supersedes applicable laws and regulations unless a specific exemption has been obtained.

1.4 ACRONYMS AND ABBREVIATIONS

Acronyms and abbreviations used in this document are listed in Appendix G.

SECTION 2 – GENERAL REQUIREMENTS

2.1 ICP APPLICABILITY

ICPs may be developed to calibrate one or more instruments or complete systems comprised of a number of components or modules. The instruments covered by a given ICP depends on the performance characteristics of the instrument(s) to be calibrated, the uniqueness or commonality of test parameters, operating controls, features, displays, etc. Where several instruments/model numbers have common operating characteristics, features and controls, it may be expedient and cost effective to cover them in the same procedure. In addition, General ICPs are used to cover a number of instruments in a generic class. A primary consideration in determining the scope of coverage of a particular ICP is the requirement that ICP instructions be clear and unambiguous with regard to the specific model numbers.

2.2 APPLICABLE DOCUMENTATION

Applicable documents and data should always be reviewed before initiating ICP preparation. The primary source of technical information concerning a TI is the equipment operation and/or maintenance manual or handbook. This document typically provides a description of the TI, its performance specifications, operating and maintenance instructions and may include information relating to its calibration. Manufacturer's catalogs or data sheets also provide information concerning the TI operating characteristics and features.

General information relating to calibration requirements (required test parameters, choice of test points, sequence of tests, etc.) for specific classes of test equipment are contained in Navy Calibration Requirements Documents (CRDs) as listed in NAVAIR 17–35MTL–1 (METRL). Recommended calibration test methods and systems for generic classes of instruments are contained in Measurement System Operation Procedures (MSOPs) and Measurement Method Modules (MMMs), also listed in METRL.

An already existing procedure on a similar TI may be of value during the writing process. It may suggest a good test method, a different approach to a calibration problem, or a shortcut method that will save calibration time. It may also point out the omission of a termination or adapter, a necessary preliminary check or adjustment, or suggest a better procedure arrangement. Such existing procedures may be Navy ICPs or LCPs, Air Force Technical Orders (AFTO) 33K series, Army Technical Bulletins (TB) 6625, 6630, 6635, etc., series, or commercially prepared calibration procedures. The Government–Industry Data Exchange Program (GIDEP) Calibration Procedure Data Bank is a source of calibration procedures including other than Navy procedures.

2.3 PERSONNEL HEALTH AND SAFETY CONSIDERATIONS

Consideration must be given to personnel health and safety during calibration procedure development and appropriate measures taken to minimize any potential health or safety hazards during the calibration process. In addition to the calibration system and procedure, the degree of safety achieved is influenced by various factors including equipment design (test instrument, calibration standards, and ancillary equipment), laboratory facilities, and environmental conditions. Various means are available to reduce potential health and safety hazards, although the control of all factors is often beyond the scope of the calibration procedure and frequently depends on local conditions, such as adequacy of the calibration facility, operator training, and the effectiveness of the local safety and health program. Notwithstanding these conditions, certain steps may be taken in the calibration procedure preparation process to minimize any potential health or safety hazards.

Contents of the calibration procedure, including system configuration; and procedure instructions, including use and operation of the test instrument, calibration equipment, and ancillary equipment should be consistent with safe and healthful practices. Appropriate WARNINGS, CAUTIONS, or NOTES should be included in the procedure to identify any equipment and operator hazards or special conditions that must be observed. Examples: High voltage or current levels; high pressure operation; high temperature baths, ovens, or surfaces; high level microwave or RF radiation; toxic, flammable or corrosive solvents; contaminated instruments or equipment, etc. Potential safety problems can also be reduced through use of appropriate calibration system configurations, clear instructions, and proper test sequences.

In order to adequately address personnel health and safety matters, the procedure contents should reflect the requirements of applicable health and safety standards which relate to the measurement area or equipment under calibration. OPNAVINST 5100.23 (Navy Occupational safety and Health (NAVOSH) Program Manual) provides overall guidance concerning NAVOSH policies and requirements. In addition, Navy Calibration Facility Requirements documents contain safety information and applicable references concerning special hazards known to exist or having particular application to facilities, systems, equipment, or operations peculiar to the Navy METCAL program.

NAVOSH standards cover personnel health and safety requirements and may consist of applicable OSHA standards or alternate/supplementary standards developed by other federal and/or nationally recognized sources. In addition, OPNAVINST 5100.23 provides guidance for utilization of the DOD Hazardous Material Information System (HMIS). The HMIS is managed by the Defense Logistics Agency (DLA) and provides a mechanism for systematic compilation/distribution of information on all hazardous materials procured by DOD. The HMIS is intended for use by activity safety and health specialists and contains information on the handling, storage, use, transportation, and disposal of hazardous materials. Accordingly, the development of calibration procedures for selected equipments or measurement areas may require familiarity with the applicable health or safety standard to enable proper coverage in the procedure.

Requirements for the use of WARNINGS, CAUTIONS, and NOTES in calibration procedures including appropriate format, identification of specific conditions/areas which may require special attention, and proper location in the procedure, are discussed in paragraphs 2.5.5 and 3.6.2 following.

2.4 USER CONSIDERATIONS

Calibration procedures and documentation should be prepared using language, format and instructions that will be understood by calibration personnel with broad variations in education, training and experience. To accomplish this, documents are prepared with the following audience considerations:

a. Users will have a high school level of education with the ability to read and comprehend written instructions.

b. Users may have had training in basic measurement theory and application.

c. Users may be familiar and knowledgeable about the calibration standards and equipment to be used in the calibration procedure, but may be totally unfamiliar with the instrument being calibrated.

2.5 STYLE AND FORMAT

2.5.1 **Style**. Procedures should be written in simple, practical language for easy understanding. Direct grammatical construction, short sentences, and the use of articles contribute to fluency and intelligibility. All statements should be clear and free from ambiguity.

Instructions should be divided into discrete steps, each step comprising one or more closely related operations, and in logical sequence to assure efficient performance of tests. Steps should be short enough to enable the operator to remember the entire operation at one reading. Instructions should use the imperative mode and direct sentences, e.g., “Set the Test Instrument FUNCTION switch to SQUARE WAVE.”

Consistency of expression and terminology should be maintained. Similar operations should be described in a similar manner. An item once identified as a variable resistor should not be referred to elsewhere as a potentiometer. However, long, unwieldy identifiers may be referred to by shorter names provided no confusion will result. For example, an item once identified as a dual–channel bridged–tee filter may be subsequently referred to as “the filter” unless more than one filter is being discussed.

All terminology, symbols, and abbreviations should be readily understandable by calibration technicians. New or unusual terms, symbols, or abbreviations should either be avoided altogether or explained at the first usage.

Adjective modifiers should take preference over prepositional phrases or the use of the possessive case. For example, “Connect the cable to the signal generator output jack” is preferred to “Connect the cable to the output jack of the signal generator” or “Connect the cable to the signal generator’s output jack.”

2.5.2 **Format**. The example procedure NAVAIR 17–20 ICP–000 (Appendix A) should be used as a general format and typing guide. This document illustrates appropriate page layouts, page/paragraph/Figure numbering, capitalization, typing fonts, etc. In addition, the general provisions of MIL–M–38784 (Manuals, Technical: General style and Format Requirements) and MIL–M–38793 (Manuals, Technical: Calibration Procedures, Preparation of) are applicable with the following exceptions:

a. Section headings should use Arabic numerals versus Roman numerals.

b. ICPs should be prepared in single column format as illustrated in the examples provided in this document.

c. ICP page size should be 8.5 by 11 inches with a final image size of 6.7 by 10 inches.

d. Pages should be numbered consecutively throughout the procedure using Arabic numerals without regard to chapter or section numbers.

e. Tables and Figures should be numbered consecutively throughout the procedure using Arabic numerals without regard to chapter or section numbers; e.g., Figure 1, Figure 2, etc.

f. The requirement in MIL–M–38784 that sections should begin on right–hand pages is not applicable. Sections need not begin at the top of a page; however, section headings should not stand alone at the bottom of a page. If it is not possible to include a step or a note below the headings, the section heading should be placed at the top of the next page.

g. The procedure number should be at the outer edge of each page as illustrated in the examples provided in this document

h. All procedures should have a list of illustrations and a list of tables as applicable.

i. The Figure number and title should be typed below the figure, using upper and lower case letters (initial capitals only). For example, the title of a figure would be shown as:

Figure 2. Demodulator Power Test Configuration

The title should be centered below the figure. Also, the lettering inside the blocks of a block diagram should be all capitals, preferably using larger letters to designate the boxes and smaller ones to identify terminals. The figures shown in NAVAIR 17–20 ICP–000 provide illustrations of Navy preferred practice.

j. Section 1 should be titled: INTRODUCTION AND DESCRIPTION.

k. Revision bars will be used to identify the content changes made to the ICP since the previous release of the document. Revision bars shall be represented as a vertical line in the outer margin of the page. These revision bars will be added to an ICP for technical changes involving changes to specifications, figures, checklists, list of standards (Section 2), and methodology (addition or deletion of a section; addition or deletion of step numbers). Revision bars will not be added for typos, renumbering (revision bars will ONLY be placed at the point of change, NOT along the whole renumbered section), changing the ICP from "Limited" to full distribution (for instance from 17–20AX–123L to 17–20AX–123), or page numbers (no revision bars shall be used solely to identify changed page numbers).

2.5.3 **Action Verbs and Terms**. The following conventions for the use of various action verbs and terms should be used:

a. Verify and ensure: Use "verify" when referring to a specification requirement, as "verify that the OUTPUT meter indicates between 49.5 and 50.5 volts." Use "ensure" when referring to operational steps that are not specification requirements, as "ensure that the equipment has warmed up for 30 minutes." Also, use "ensure" for a condition that should be satisfied prior to performing the next procedure step or requirement

b. Adjust and set: Use "adjust" for continuously variable controls; use "set" for controls with detents and for a group of controls, some of which may be continuously variable, as "set the TI OUTPUT controls as follows."

c. Press and release: Use the terms "press" and, as applicable, "release" for push buttons.

d. Following and preceding: Use "following" and "preceding" rather than "below" or "above" when referring to other information in the calibration procedure since the other information may not appear on the same page when the ICP is published.

e. Read and indicate: Use "read" when referring to operations performed by the technician and "indicate" when referring to the readout of an instrument.

f. Set up and setup: Use "set up" when referring to taking action to position or arrange equipment (i.e. set up the equipment). Use the word "setup" when referring to an arrangement of instruments or equipment (i.e., equipment setup). Do not use "set–up".

2.5.4 **Terms, Abbreviations, and Units**. Whenever practicable, standardized terms, abbreviations, and units should be used. Standard terms, abbreviations, and units are contained in ANSI/IEEE–100, MILSTD–12, and ISO–STD–1000 respectively. Appendix B, excerpted from ISO–STD–1000, lists the appropriate prefixes and symbols for expressing multiples of SI units (SI refers to the international system of units). Appendix C contains abbreviations for expressions typically used in calibration procedures and includes excerpts from MILSTD–12. (See Appendix D for further identification of the above documents.) In addition, the following conventions should be followed:

a. Most abbreviations are written without periods. An exception is when the abbreviation would otherwise spell a word such as: in., coax., fig. Periods should also be used with Latin–derived abbreviations such as i.e., e.g., max., min., and approx.

b. In general, express abbreviations in lowercase unless there is a need for special emphasis, or to avoid confusion.

c. Hyphens should not be used to separate two–letter combinations, or abbreviations of words when the combinations are used as compound modifiers. A few examples are: RF voltmeter, dc source, AM reception, VM dial, TI resistance standard.

2.5.5 **Warnings, Cautions, and Notes**. These three classes of special comments are highlighted by use of capitals and by indenture within left and right margins (see examples paragraph 3.6.2, Figure 7 following).

2.5.5.1 **Warnings**: Use all capital letters. Use Warnings when there is a danger, such as high voltage, to personnel. Warnings should precede the applicable text, but follow paragraph headings to which they apply.

2.5.5.2 **Cautions**: Use all capital letters. Use Cautions when there is a possibility of damage to equipment Cautions should precede the applicable text, but follow the paragraph headings to which they apply.

2.5.5.3 **Notes**: Use initial capitals and lower–case letters. Use Notes to inform the technician of special considerations or to clarify requirements pertinent to the calibration. Notes should precede or follow the applicable text, depending on the material to be highlighted.

2.5.6 **Figures and Tables**. Figures, charts, tabular data, or other illustrations should be used when appropriate to make the procedure more understandable. Figures, charts, or illustrations should be as simple as possible consistent with the intended purpose. A table should consist of all inclusive information (stand alone) and have a title and a number as shown in Appendix A (Table 1, Section 1). Tabular data included in sections 3 and 4 shall not be numbered and shall be referenced as a table following the appropriate step.

Figures, tabular data, charts, illustrations, etc., should be placed as near as possible to, and preferably following, the applicable portion of the text consistent with good layout and neat appearance. Figures, tabular data, charts, photographs, etc., should be placed vertically on the page whenever possible. If a horizontal position cannot be avoided, the bottom should be toward the right of the page.

Horizontal lines should be ruled at the top and bottom of each table heading and at the end of the table. Vertical lines should be used between columns, but no lines should be used at the sides of the table (See Appendix A). Horizontal lines may be inserted in the table if needed for clarity or easier reading.

2.5.7 **Formulas**. When typing formulas, center the formula under the preceding text and skip two spaces above and below the formula. If the formula includes fractions, align the equals sign and non–fractional terms with the fraction bars. Arrange the subordinate notation as shown below:

$$W = M \frac{g}{g_o}\left(1 - \frac{d_a}{d_b}\right)$$

Where:

W = Weight, lb.
M = Apparent mass in air, lb.
g = Acceleration due to gravity, ft/sec^2

SECTION 3 – DETAILED REQUIREMENTS FOR ICP PREPARATION

3.1 **ICP COMPOSITION**

ICPs should include the following essential parts:

a. Front Matter

b. SECTION 1. INTRODUCTION AND DESCRIPTION

c. SECTION 2. EQUIPMENT REQUIREMENTS

d. SECTION 3. PRELIMINARY OPERATIONS

e. SECTION 4. CALIBRATION PROCESS

f. Calibration Checklist(s)

In addition to the above, special applications may require the use of appendices and worksheets. Examples of appendices include TI standardization, alignment instructions, reports of calibration, etc. Worksheets are used for recording data used in performing calculations in accordance with procedure instructions. Requirements for preparation of individual sections of an ICP are described in paragraphs 3.4 through 3.9 following.

3.2 **ICP BOILER PLATE**

Boiler plate paragraphs have been developed for the various sections of an ICP to expedite procedure preparation and word processing. The boiler plates contain standard statements/instructions applicable to most procedures. However, care should be exercised in their use since variations from the standard statements may be required. In addition to the standard boiler plate for Sections 1, 2, 3, and 4 of the ICP, boiler plate have been developed to cover special applications or tests relevant to a particular class of TI. Available boiler plate statements are shown in Appendix E.

3.3 **PREPARATION OF FRONT MATTER**

The “Front Matter” of an ICP consists of a Title page, an “A” page, and a Table of Contents. When a Test Instrument has both a Military number and a manufacturer’s part number, the Military number should be listed first, e.g., TTU–451/E and TTU–521/E, Clifton Precision P/N 1780AS100–1, P/N 1780AS100–2, and P/N 3300157–6101 Oxygen Enriched Air System (OAES) Regulator Monitor Test Set. (See paragraph 3.4.2 following concerning TI identification.) Figures 1, 2, and 3 illustrate an ICP title page, “A” page, and Table of Contents, respectively.

For programmable instruments, IEEE–488 Interface Bus tests should be performed in Section 3 if the bus is utilized in Section 4 to test TI performance characteristics. Use the following steps as a boilerplate to add the IEEE bus test to the ICP:

3.5 IEEE BUS TEST

NOTE

The IEEE Bus Test programs and their manual supplements [NAVAIR 17–20MSYS–036M (MECCA) or NWAD 35–HBK–1–1 (EzCal) <use current version>] will be used in conjunction with this ICP when performing the IEEE Bus Test. The IEEE Bus Command and expected response (if any) used to test the TI IEEE Bus will come from this ICP.

3.5.1 Refer to NA 17–20MSYS–036M or NWAD 35–HBK–1–1 <use current version> and follow the applicable instructions to test the TI IEEE bus using the following command(s) and verify that the corresponding response is obtained.

3.5.1.1 Using the (“Listen”, “Talk”, or “Talker/Listener”) Bus Command “_____”, verify that the following response is obtained “_____”, on either the TI or instrument controller display.

This page left intentionally blank.

NAVAIR 17–20MP–150

MP–150

TECHNICAL MANUAL

INSTRUMENT CALIBRATION PROCEDURE

OXYGEN ENRICHED AIR SYSTEM (OAES) REGULATOR MONITOR TEST SET

TTU–451/E AND TTU–521/E
CLIFTON PRECISION
P/N 1780AS100–1, P/N 1780AS100–2
AND
P/N 3300157–6101

THIS PUBLICATION SUPERSEDES NAVAIR 17–20MP–150
DATED 1 JUNE 1991

DISTRIBUTION STATEMENT C. DISTRIBUTION AUTHORIZED TO U.S. GOVERNMENT AGENCIES AND THEIR CONTRACTORS TO PROTECT PUBLICATIONS REQUIRED FOR OFFICIAL USE OR FOR ADMINISTRATIVE OR OPERATIONAL PURPOSES ONLY. OTHER REQUESTS FOR THIS DOCUMENT SHALL BE REFERRED TO NAVY MEASUREMENT SCIENCE DIRECTORATE, NAVAL WARFARE ASSESSMENT DIVISION, P.O. BOX 5000 CORONA, CA 91718–5000

DESTRUCTION NOTICE– FOR UNCLASSIFIED, LIMITED DOCUMENTS, DESTROY BY ANY METHOD THAT WILL PREVENT DISCLOSURE OF CONTENTS OR "RECONSTRUCTION OF THE DOCUMENT."

PUBLISHED BY DIRECTION OF COMMANDER NAVAL AIR SYSTEMS COMMAND

1 MARCH 1992

Figure 1. Sample ICP Title Page

LIST OF EFFECTIVE PAGES

The purpose of this list is to identify the pages in this document affected by any content changes made since the previous release of the document.

NOTE: On a revised page, with the exception of the Title, the A, and the i pages, the technical changes are indicated by a vertical line in the outer margin of the page.

Page No.	Revision*	Page No.	Revision*	Page No.	Revision*
Title	0				
A	0				
i	0				
1 to					

* Zero in this column indicates an original page.
"R" in this column indicates a revised page.

A

Figure 2. Sample ICP "A" Page

TABLE OF CONTENTS

Section		Page
1	Introduction and Description	1
2	Equipment Requirements	6
3	Preliminary Operations	8
4	Calibration Process	11
4.1	Confidence Tests	11
4.2	RF Subsystem Tests (GS & GCS Station Configurations Only)	12
4.3	Fuze Processor Tests (GS & GCS Station Configurations Only)	62
4.4	Hydraulic Tests	66
4.5	Wing Transducer Tests	68
4.6	Calibration Wrap–Up	69
	Navy Calibration Checklist	71
	Appendix A: TI Station Initial Connections	A–1
	Appendix B: Calibrator Setup And Tuned Rf Level Operation	B–1
	Appendix C: Attenuation Measurements Data Sheet	C–1

ILLUSTRATIONS

Figure		Page
1	PD Spectrum Sample Display	15
2	PD Modulation Duty Cycle Test Configuration	16
3	PD Modulation Sample Display	17
4	CW Coding Deviation Sample Display	24
5	1/2 CW Coding Sample Display	25
6	1/2 PD Coding Sample Display	26
7	Carrier Sweep Sample Display	27
8	Wideband Noise Sample Display	32
9	Rear Ranging Sample Display	45
10	YIG Tuning Sample Display	49
11	Front Signal Ramp Rate Test Configuration	53
12	H–P 84502A Front Panel and Function Key Layout	54
13	Acceptable Linear Ramp Sample Display	56
14	Unacceptable Linear Ramp Sample Display #1	56
15	Unacceptable Linear Ramp Sample Display #2	57
16	Fuze Processor Test Configuration	63
17	Fuze Spectrum Sample Display	65
18	Hydraulic Test Configuration	67

TABLES

Table		Page
1	Calibration Description	1
2	Equipment Requirements	6

Figure 3. Sample ICP Table of Contents

3.4 PREPARATION OF SECTION 1 (INTRODUCTION AND DESCRIPTION)

3.4.1 **Purpose in ICP**. The purpose of Section 1 of the ICP is to identify the test instrument and to provide introductory information and a Calibration Description (identified as Table 1 in the ICP). Table 1 consists of a tabular listing of TI characteristics, performance specifications, and applicable test methods. Requirements for the preparation of individual elements of Section 1 are discussed below.

3.4.2 **Test Instrument Identification**. The following requirements apply for identifying the test instrument:

a. Use the manufacturer's name as it appears on the instrument and instruction manual. Companies frequently change names, so the same instrument made at different times may have different manufacturers; in such a case, show both names.

b. Use the exact model number assigned by the manufacturer, including any prefix, suffix, dash number, option number, etc. Alternate identification should be included whenever applicable. A commercial model may have a military equivalent with the same performance specifications; for example, the TS–312A and the Hewlett–Packard 200CD oscillator. Also, a commercial instrument may be assigned a part number by a contractor, with or without a modification to the instrument. When the modification is such that both the modified and unmodified instruments can be calibrated by the same procedure, both numbers should be included.

c. When a test instrument has both a military number and a manufacturer's part number, the military number should be listed first. (See paragraph 3.3 preceding).

d. Use the exact nomenclature that the manufacturer used. What one manufacturer calls a Volt–Ohm–Millimeter may be called a Multimeter by another.

3.4.3 **Introductory Information**. The introductory information contained in Section 1 will vary depending on the particular type of test instrument and whether any special conditions exist for performance of the calibration. In some ICPs the standard boiler plate (Appendix E) will apply, whereas in others there may be a need to include supplementary information. Such supplementary information might be: basis for establishment of TI performance specifications, differences in calibration periodicity for individual TI components, the need to observe special safety regulations (e.g., oxygen cleaning requirements), applicability of military specifications or standards, applicability of the procedure to designated equipment allowances (e.g., workstation standards, on–site, in–situ, or in–lab requirements), etc. In addition, if the procedure was derived from an ICP or LCP prepared by other Navy activities, an appropriate acknowledgment statement should be inserted (see paragraph 3.4.5.1 following).

3.4.4 **Calibration Description (Table 1)**. The characteristics, performance limits, and test methods pertinent to the calibration should be presented in Table 1 of the ICP. Primary considerations in the development of Table 1 are as follows:

a. Completeness. All required performance parameters are tested in accordance with a valid reference such as a manufacturer's manual, performance specifications, use requirements, etc.

b. Tolerances. Tolerances listed are correct in accordance with the applicable specifications; no tolerances are missing, and the listed tolerances are appropriate to field use of the Test Instrument.

c. Adequacy of Test Methods. The methods employed are technically sound and adequately assess the parameters being tested.

General requirements for the development of Table 1 are discussed below. The detailed procedure for developing Table 1 is provided in paragraph 3.4.5 following.

3.4.4.1 **TI Characteristics Requiring Test or Verification**. In general, each TI characteristic which has a specified performance and/or accuracy requirement requires testing. Tests are considered in two categories, tolerance tests and functional checks as defined below:

3.4.4.1.1 **Tolerance Tests**. Tolerance tests are intended to verify that the TI is performing within the specified tolerance limits or other applicable criteria at the time of calibration. Tolerance tests are usually quantitative. Examples of tolerance tests include voltmeter accuracy tests, pressure gage accuracy tests, oscilloscope sweep time tests, dial indicator dimensional accuracy tests, and signal generator frequency accuracy tests.

3.4.4.1.2 **Functional Checks**. Functional checks are intended to ensure that the TI is in satisfactory operating condition and is functioning satisfactorily at the time of calibration. While not directly related to the TI accuracy or specified performance, functional checks are still important to proper operation of the equipment. Examples of functional checks include signal generator external synchronization and modulation checks; oscilloscope intensity, focus and astigmatism checks; digital multimeter auto–range, input impedance, and common mode rejection checks; electronic counter input coupling and trigger level checks.

An instrument can apparently be functioning satisfactorily yet not meet its accuracy tolerances; for example, a signal generator which produces an output signal but whose frequency is out of tolerance. Conversely, a malfunctioning instrument can meet its specified tolerances; for example, an oscilloscope whose sweep time is within tolerance but whose sweep time vernier has insufficient range to provide overlap.

3.4.4.1.3 **Calibration Requirements Documents (CRDs)**. Calibration Requirements Documents (CRDs), available as NAVAIR 17–35CR series publications, designate test requirements for selected generic classes of test equipment, provide guidance concerning the performance of tolerance tests and functional checks, and include data concerning required test parameters, rationale for performing tests, choice of test points, sequence of tests, etc. Available CRDs are listed in METRL. Additional information concerning test requirements criteria is contained in NAVAIR 17–35TR–1, which covers Navy calibration philosophy and technical requirements. In the absence of definitive guidance as to whether a TI characteristic requires tolerance testing or a functional check, the decision chart of Figure 4 may assist in making the determination.

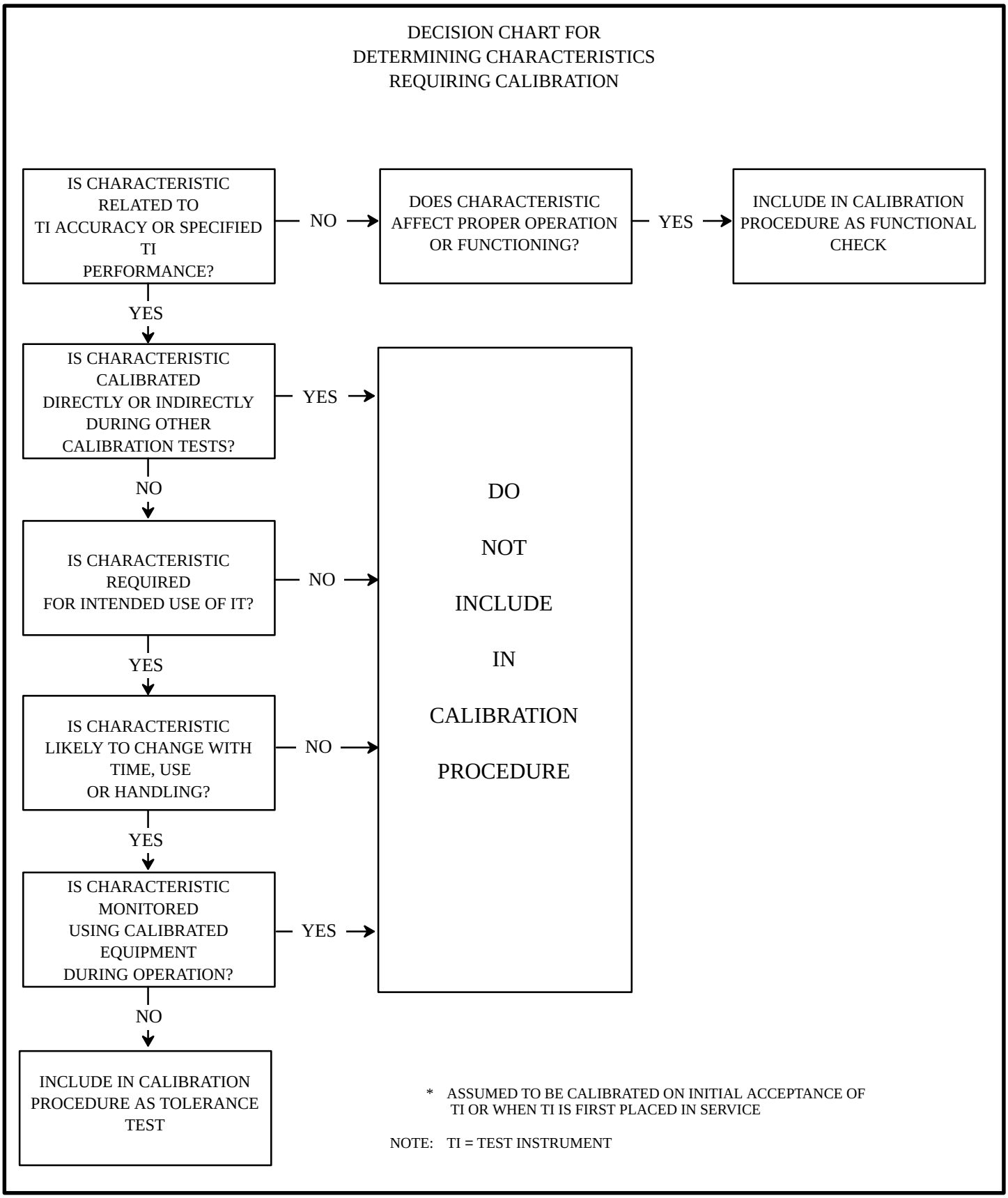

Figure 4. Decision Chart

3.4.4.2 **TI Performance Specifications and Test Tolerances**. Generally, the performance specifications to be listed in Table 1 of the ICP are those stated by the manufacturer in the applicable operation and maintenance manual, data sheet, or catalog. In some cases, weapon system or other use requirements may override the manufacturer's specifications and should be reflected in the Table 1 performance specifications. Also, tolerances are sometimes derived from other specifications such as Federal or Military Specifications and Standards. Examples of items covered by such specifications include pressure gages, panel meters, torque tools, and other devices used for shipboard applications. For newly procured items, it may be necessary to refer to the procurement specifications (with amendments and deviations). In some cases, it may be necessary to obtain tolerance data from the manufacturer, manufacturer's representative, or cognizant procurement agency.

In view of the variety of data sources which may be applicable, as indicated above, it may be necessary to conduct a requirements analysis to determine the appropriate performance specifications and test tolerances. The following information, extracted from NAVAIR 17–35TR–1 (Technical Requirements for Calibration of Test and Monitoring Systems (TAMS)) outlines METCAL program policy with regard to TAMS performance/use specifications:

a. As a matter of policy, TAMS should be calibrated to their actual use requirements. This policy results in three general approaches to establishing TAMS performance requirements as described below:

   (1) In the case of Special Purpose Test Equipment (SPTE) or General Purpose Test Equipment (GPTE) used only for specific and well defined test applications, the actual use requirements can often be clearly identified and form the basis for the calibration requirements (parameters, ranges, accuracy, etc.) These requirements may be established by contractual specifications/documentation (e.g., Calibration Requirements Analysis (CRA), Calibration Measurement Requirements Summary (CMRS)) or by cognizant Navy activities. When the actual use requirements are clearly known for specific models of TAMS, Instrument Calibration Procedures should be based on these requirements.

   (2) In the case of GPTE used for a variety of general purpose applications, it is assumed that the GPTE must perform to the manufacturer's specifications. This is a reasonable assumption since TAMS users typically expect the test equipment to perform as advertised and use it accordingly. Therefore, the manufacturer's specification becomes the performance specification which is the basis for ICPs.

   (3) In some instances, individual TAMS users can identify limited use requirements for any model/serial TAMS dedicated to support of specific applications. When these limited use requirements are identified, individual calibration laboratories are responsible for performing the calibration to the actual use requirements identified. Upon completion of the calibration, a "Special Calibration" label or tag must be attached to the TAMS identifying the actual performance requirement supported bythe calibration.

If the manufacturer's specifications are not used, a statement should be included in the text of Section 1 or as a footnote to Table 1 stating the rationale for the established tolerances. See paragraph 3.7.2.11 following for a discussion of the manner of expressing performance specifications and test tolerances.

3.4.4.3 **Test Method**. The particular test method utilized to perform a calibration is dependent on the TI configuration, performance specifications, and accuracy requirements. In addition, availability of calibration standards, logistic considerations, and personnel capabilities will influence test method selection. Logistic considerations include designated support scheme; e.g., on–site, in–situ, in–lab, etc. The applicable support sites and personnel manning these sites will also dictate test method selection; e.g., Field Calibration Activity (FCA) vs. Calibration Laboratory, etc. Notwithstanding the above constraints, the following general guidelines apply to designation or selection of appropriate test methods for a given application.

3.4.4.3.1 **Calibration Standards**. To assure uniformity and consistency, test methods are to employ standards and calibration equipment listed in the Navy Calibration Equipment List, NAVAIR 17−35NCE−1. In addition, consideration should be given to authorized equipment allowances at specific support sites. Additional guidance for the selection of calibration equipment is included in paragraph 3.5.2.3 following.

3.4.4.3.2 **Test Accuracy Ratio**. The calibration system, comprised of designated calibration equipment, should result in a Test Accuracy Ratio (TAR) of 4:1 or better for each parameter tested (TAR is defined as the ratio of the TI tolerance to the uncertainty of the standard or calibration system for a given characteristic). When several items of calibration equipment meet these requirements, preference should be given to the equipment affording the simplest, quickest, and most efficient test method required to perform the complete calibration procedure. Additional guidance relating to Test Accuracy Ratio is included in paragraph 3.5.2.2 following.

3.4.4.3.3 **Black Box Testing**. Whenever practicable, test methods should utilize overall performance (black box) testing techniques. This consists of methods which measure Test Instrument output parameters as end products without connection of calibration equipment to internal components of the Test Instrument. For example, there is no need to test the internal power supply of such instruments as signal generators, oscilloscopes, electronic voltmeters, etc., because performance of the power supply is indirectly verified by monitoring output frequency, amplitude, or similar parameters of the test instrument.

3.4.4.3.4 **Test Sequence**. The following factors should be considered in establishing the test sequence:

a. Dependence or Interaction. Where the measurement of one parameter depends on the prior measurement of another, or where circuits or corrective adjustments interact, adopt a test sequence that satisfies the dependence or minimizes the effects of the interaction. An example of dependence is the calibration of oscilloscope vertical rise time, which depends on the time base accuracy. Therefore, the sweep time calibration must precede the rise time measurement. An example of interaction is oscilloscope horizontal gain, trace length, and sweep time which should be calibrated consecutively due to possible interaction of corrective adjustments.

b. Test Efficiency. After considering dependence and interaction, tests should be grouped so that the tests requiring the same calibration equipment setup are performed consecutively. For example, oscilloscope trace length, sweep time, sweep linearity, sweep magnifier accuracy, and delayed sweep tests should be performed consecutively since they all require a time mark generator.

c. Minimum Retesting. Tests of parameters or functions whose corrective adjustment or repair could affect a number of other tests, should be performed early to minimize the need for retesting. For example, if line regulation is to be tested, this should be performed early in the calibration since failure leading to repair or adjustment could affect several other tests.

d. Logical Grouping. In addition to the preceding considerations, tests should be arranged in functionally related groups. For example, all tests relating to an oscilloscope vertical amplifier should be grouped as much as possible. Sometimes the appropriate groupings are the result of other considerations, such as the grouping of oscilloscope vertical gain and vertical attenuator accuracy, which are performed in sequence because of dependence.

e. Testing with TI Components. Tests of parameters or functions with TI components should be performed after the TI components in question are calibrated. For example, if a TI pressure gage is used to test the TI system leak rate, the TI gage must first be calibrated.

3.4.4.3.5 **Measurement System Operation Procedures**. Measurement System Operation Procedures (MSOPs) have been developed which document approved test methods. Available documents are listed in METRL.

3.4.5 **Procedure for Preparation of ICP Section 1**. Development of Section l is typically accomplished as follows:

3.4.5.1 **Test Instrument Identification and Introductory Information**. Identify the TI and insert required introductory information in accordance with paragraphs 3.4.2 and 3.4.3 preceding. Refer to Appendix E for any boiler plate that may apply. In addition, if the procedure was derived from an ICP or LCP prepared by an activity external to MSD, insert the following statement, as applicable for paragraph 1.2;

> 1.2 This procedure was derived from _____. (Insert "LCP No._____" or "a draft") prepared by_____. All comments concerning this procedure should be directed to Measurement Science Directorate (MSD), Naval Warfare Assessment Division, P.O. Box 5000, Corona, CA 91718–5000."

3.4.5.2 **Table 1**. Enter required data as follows (a copy of the Table 1 boiler plate or a work sheet may be used for this purpose):

a. TI Characteristics. In the first column of Table 1, list all characteristics of the TI that might require testing or checking. Refer to the test requirements criteria and data sources given in paragraph 3.4.4.1 preceding. Other sources for characteristics are manufacturer's instruction manuals, catalogs, or data sheets. If questions exist as to whether a TI characteristic requires calibration, refer to the decision chart of Figure 4. List the characteristics to be tested or checked in logical testing order using the criteria of paragraph 3.4.4.3d preceding to arrive at the best testing sequence. It is possible that this order may have to be revised when Section 4 is prepared.

b. Performance Specifications. In the second column, list the applicable specifications for each characteristic listed in the first column. Refer to paragraph 3.4.4.2 preceding for guidance as to the appropriate source for the specifications. Describe each performance specification as briefly as you can without omitting any of the manufacturer's stipulations. MSD has standardized on the term "tolerance" rather than "accuracy" or "limit of error" for entries in Table 1. If the performance specifications listed in Table 1 differ from that established by the manufacturer, provide the rationale as a footnote to Table 1 or as a step in the Section 1 introductory statements; e.g., "The specifications listed in Table 1 are derived from the applicable weapon system document."

c. Test Method. In the third column, provide a brief summary of the test method. A test method should be shown for each characteristic listed in the first column which has a corresponding performance specification in the second column. Refer to paragraph 3.4.4.3 preceding for guidance on proper choice of test method. If not immediately sure of the test method, leave space to enter it later.

NOTE

If a performance characteristic is not tested due to a lack of capability or NCR criteria, the statement "not tested" or "calibration not required" should be entered in the third column opposite for the applicable characteristic. If a given test method has limitations (e.g., does not meet the 4:1 TAR requirement), an explanation should be provided as a footnote to Table 1.

3.4.6 **Examples of Section 1**. Figure 5 is provided to illustrate a completed Section 1 for typical test instruments. It should be noted that the examples are provided to illustrate typical entries and introductory information for a variety of test instrument types. They are not to be used for guidance in format. Appendix A (ICP–000) is provided for style and format purposes.

EXAMPLES OF ICP SECTION 1

Figure

5A Digital Nanovoltmeter

5B Oscilloscope (paragraph 1.4 indicates that the ICP is supportable with NAVSEA workstation).

5C Scalar Network Analyzer (paragraph 1.4 indicates that accessory equipment must be submitted with TI).

5D Angle Blocks (General ICP – refers to Appendix for listing of TIs covered by ICP).

5E Diesel Generator Control Panel Diesel Exhaust Temperature SSBN 726 Class Submarines (on–site, in–place). Paragraphs 1.3 and 1.4 include requirements for reporting TI malfunctions to ship's cognizant personnel and for obtaining permission of ship's cognizant officer to perform the calibration.

5F Vibration Test Set (Paragraph 1.2 provides example of a statement identifying that the procedure was prepared by an activity external to NWAD.)

Figure 5. Examples of ICP Section 1

SECTION 1

INTRODUCTION AND DESCRIPTION

1.1 This procedure describes the calibration of the Keithley 181 Digital Nanovoltmeter. The instrument being calibrated is referred to herein as the TI (Test Instrument).

1.2 All comments concerning this procedure should be directed to Navy Measurement Science Directorate, Naval Warfare Assessment Division, P.O. Box 5000, Corona, CA 91718–5000.

1.3 This procedure includes tests of essential performance parameters only. Any malfunction noticed during calibration, whether specifically tested for or not, should be corrected.

Table 1. Calibration Description

TI Characteristics	Performance Specifications	Test Method
ZERO function	Removes offset voltages from TI to ensure an accurate reading.	Visual check.
DAMPING function	Slows settling time of display and minimizes noise.	Settling time is measured with a stopwatch.
FILTER function	Same as DAMPING function.	Settling time is measured with DAMPING and FILTER functions both active.
HI RESOLUTION function	An extra digit is added to the display.	Visual check.
Noise	The display should not change by more than 30 counts in a two minute period.	Visual check.
DC Voltage	(5 1/2 digits) Range: 2 mV Tolerance: ±(0.015% iv + 5 digits) Range: 20, 200 mV Tolerance:± (0.015% iv + 2 digits) Range: 20 V Tolerance:± (0.007% iv + 2 digits) Range: 200, 1000 V Tolerance:± (0.01% iv + 2 digits)	Measured with a DC voltage supply.
Analog output	Range: 0 to 2 V dc Tolerance:± (0.15% iv + 1 mV)	Measured with a DMM.

Figure 5A. Example of ICP Section 1 (Digital Nanovoltmeter)

This page left intentionally blank.

SECTION 1

INTRODUCTION AND DESCRIPTION

1.1 This procedure describes the calibration of the Tektronix 2245, 2246, 2246OPT1Y, 2246MODA, 2246OPT2R, and 22467A Oscilloscopes. The instrument being calibrated is referred to herein as the TI (Test Instrument).

1.2 All comments concerning this procedure should be directed to Navy Measurement Science Directorate, Naval Warfare Assessment Division, P.O. Box 5000, Corona, CA 91718–5000.

1.3 This procedure includes tests of essential performance parameters only. Any malfunction noticed during calibration, whether specifically tested for or not, should be corrected.

1.4 This TI can be supported using workstations 1B and 2B.

Table 1. Calibration Description

TI Characteristics	Performance Specifications	Test Method
Vertical amplifier balance	Trace shift (no input): ≤0.2 div. over the VOLTS/DIV control range; ≤1 div. over the VOLTS/DIV VAR control range	Observe TI CRT displays as the vertical sensitivity is changed.
Trace alignment	Trace coincident with the graticule lines	Observed and adjusted as necessary.
CRT geometry	Not more than 0.1 division tilt or bowing	Time markers are displayed on the TI CRT and observed for correct geometry.
Vertical amplifier chopped mode	Repetition rate: 625 kHz ±10%	Not tested.
Vertical amplifier accuracy	CH 1 and CH 2 Range: 2 mV/div to 5 V/div in 11 calibrated steps, in a 1, 2, 5 sequence Tolerance: ±2% CH 3 and CH 4 Range: 0.1 V/div and 0.5 V/div Tolerance: ±2%	Tested by applying a signal of known amplitude to the TI input and observing the results on the CRT.
Low frequency linearity	Compression or expansion of a center 2 divisions signal shall not exceed 0.1 division at the top or bottom of the CRT	Tested by observing a 2 division signal on the CRT.

Figure 5B. Sample ICP Section 1 (Oscilloscope)

TI Characteristics	Performance Specifications	Test Method
Voltmeter accuracy	(2246, 2246OPT1Y, 2246OPT2R, and 2246MODA) Tolerance: DC volts: ±(0.5% of reading + 2% of one vertical division + 250 mV) +PEAK or –PEAK: ±(2% of reading + 10% of one vertical division + 1 mV)PK–PK: ±(2% of reading + 10% of one vertical division + 1.5 mV)	Voltmeter accuracy is tested by comparing the TI voltage measurements with that of an accurate source.
Counter/timer accuracy (For 2247A only)	Time Base: 200 MHz Accuracy: ±10 ppm	Tested in accordance with NAVAIR 17–20AF–11.

1.5 Sweep length is tested by inference during all sections of this procedure by observation of the TI CRT display.

Figure 5B. Sample ICP Section 1 (Oscilloscope) (Continued)

SECTION 1

INTRODUCTION AND DESCRIPTION

1.1 This procedure describes the calibration of the Hewlett–Packard 8757A, 8757AOPT001, 8757C, 8757COPT001, 8757D, 8757E, and 8757EOPT910 Scalar Network Analyzers. The instrument being calibrated is referred to herein as the TI (Test Instrument).

1.2 All comments concerning this procedure should be directed to Navy Measurement Science Directorate, Naval Warfare Assessment Division, P.O. Box 5000, Corona, CA 91718–5000.

1.3 This procedure includes tests of essential performance parameters only. Any malfunction noticed during calibration, whether specifically tested for or not, should be corrected.

1.4 The TI should be submitted for calibration with either the Hewlett–Packard 11664A/D/E, and/ or 85025A/B/D/C Series Detectors.

1.5 This procedure can be performed utilizing workstations 5A, 5B and 6A.

Table 1. Calibration Description

TI Characteristics	Performance Specifications	Test Method
Dynamic range and power accuracy	Dynamic range: H–P 11664A/E series detectors ≥+16 to –60 dBm (AC mode) H–P 11664D detector ≥+10 to –50 dBm (AC mode) H–P 85025A/B/D/E series detectors ≥+16 to –55 dBm (AC mode) ≥+16 to –50 dBm (DC mode) Dynamic power accuracy: H–P 11664A/E series detectors Tolerance: [A, B, C[1], and R inputs referenced to 0 dBm (except as noted)]: +16 dBm: ±0.40 dB +10 to –40 dBm: ±0.30 dB –45 dBm: ±0.35 dB –50 dBm: ±0.40 dB –55 dBm: ±0.80 dB –60 dBm: ±1.20 dB H–P 11664 D detector Tolerance: [A, B, C[1], and R inputs referenced to 0 dBm]: +10 dBm: ±0.5 dB +8 dBm: ±0.4 dB 0 to –35 dBm: ±0.2 dB –40 dBm: ±0.5 dB –45 dBm: ±0.7 dB –50 dBm: ±1.0 dB	Tested with a sweep oscillator, step attenuators, and a detector.

[1] TIs with OPT001 only.

Figure 5C. Sample ICP Section 1 (Scalar Network Analyzer)

TI Characteristics	Performance Specifications	Test Method
Dynamic range and power accuracy (cont'd)	<u>H–P 85025A/B series detectors</u> Tolerance [A, B, C[1], and R inputs referenced to 0 dBm (except as noted)]: +16 dBm: ±0.75 dB +10 dBm: ±0.575 dB +5 to –35 dBm: ±0.40 dB –40 dBm: ±0.70 dB –45 dBm: ±1.00 dB –50 dBm: ±1.30 dB –55 dBm: ±1.60 dB <u>H–P 85025D/E series detectors</u> Tolerance [A, B, C[1], and R inputs referenced to 0 dBm (except as noted)]: +16 dBm: ±1.00 dB +10 dBm: ±0.60 dB +5 to –35 dBm: ±0.40 dB –40 dBm: ±0.70 dB –45 dBm: ±1.00 dB –50 dBm: ±1.30 dB –55 dBm: ±1.60 dB <u>H–P 11664A/E series detectors</u> Except for ≤20 dB change of power within +10 to –40 dBm: ±(0.1 dB + 0.01 dB/dB)	
Modulator drive	Absolute magnitude: >2.2 V into 50 ohms Modulation frequency: 27.778 kHz Tolerance: ±0.012 kHz Symmetry (50/50 ±1%): Positive half–cycle: 18.00 ms Tolerance: ±0.35 ms Negative half–cycle: 18.00 ms Tolerance: ±0.35 ms	Tested and measured with an oscilloscope and an electronic counter.

[1] TIs with OPT001 only.

Figure 5C. Sample ICP Section 1 (Scalar Network Analyzer) (Continued)

SECTION 1

INTRODUCTION AND DESCRIPTION

1.1 This procedure describes the calibration of angle blocks. Angle gage blocks with reflective measuring surfaces are excluded from this procedure. Angle blocks which may be calibrated using this procedure, include but are not limited to, the angle blocks and angle block sets listed in Appendix A. The angle block being calibrated is refereed to herein as the TI (Test Instrument).

1.2 All comments concerning this procedure should be directed to Navy Measurement Science Directorate, Naval Warfare Assessment Division, P.O. Box 5000, Corona, CA 91718–5000.

1.3 This procedure includes tests of essential performance parameters only. Any malfunction noticed during calibration, whether specifically tested for or not, should be corrected.

Table 1. Calibration Description

TI Characteristics	Performance Specifications	Test Method
Angle	Range: 15 min of arc to 30 dg of arc in discrete steps Tolerance: ±0.0003 in	Comparison to one or more standard angle gage blocks of equivalent nominal size, placing the TI on top of the standard(s) and measuring the deviation of the TI upper surface from the horizontal, using a height gage and an electronic indicator.

Figure 5D. Sample ICP Section 1 (Angle Blocks)

SECTION 1

INTRODUCTION AND DESCRIPTION

1.1 This procedure describes the on–site, in–place calibration of the Diesel Exhaust Resistance Temperature Detector Indicator of the Diesel Generator Control Panel located on the SSBN 726/734 Class Submarines. The instrument being calibrated is referred to herein as the TI (Test Instrument). System consists of the following major components:

Resistance Temperature Detector (RTD)	VH–20–RTD–01
Temperature Monitor Indication	VH–451–M–01
Temperature Alarm	VH–452–AAV–01.

1.2 All comments concerning this procedure should be directed to Navy Measurement Science Directorate, Naval Warfare Assessment Division, P.O. Box 5000, Corona, CA 91718–5000.

1.3 This procedure includes tests of essential performance parameters only. Any malfunction noticed during calibration, whether specifically tested for or not, should be corrected.

1.4 Obtain permission of the cognizant officer to perform this calibration.

Table 1. Calibration Description

TI Characteristics	Performance Specifications	Test Method
Temperature indicator	Range: 0 to 1000° F Tolerance: ±25° F	Insert known resistance values into measuring circuit to test meter and alarm.
Temperature	Alarm on, increasing: 250° F Tolerance: ±5° F Alarm off decreasing within 3 Ω of alarm increasing trip point	
Temperature bulb	Range: Ambient Tolerance: ±25° F	Measure bulb ambient temperature with standard digital thermometer.

Figure 5E. Sample ICP Section 1
(Diesel Generator Control Panel Diesel Exhaust Temperature SSBN 726 Class Submarines)

SECTION 1

INTRODUCTION AND DESCRIPTION

1.1 This procedure describes the calibration of the Bell and Howell CEC Division LTCT 20596–01 Vibration Test Set using Dynamic Instruments, Inc. DI–811 Portable Vibration Calibrator (PVC). The instrument being calibrated is referred to herein as the TI (Test Instrument).

1.2 This procedure was derived from a draft prepared by Naval Air Warfare Center, Aircraft Division, Patuxent River, MD. All comments concerning this procedure should be directed to Navy Measurement Science Directorate, Naval Warfare Assessment Division, P.O. Box 5000, Corona, CA 91718–5000.

1.3 This procedure includes tests of essential performance parameters only. Any malfunction noticed during calibration, whether specifically tested for or not, should be corrected.

Table 1. Calibration Description

TI Characteristics	Performance Specifications	Test Method
LTCT 22031–01 Vibration Meter		
Velocity	Range: 0.05 to 50 ips avg. Tolerance: ±1% fs Linearity tolerance: ±2% fs Frequency: 5 to 20,000 Hz Tolerance: ±2% fs	Tested with known input amplitudes.
Sensitivity	Dial range: 5 to 15 (settings between 50 and 150 mV/in./sec) Tolerance: ±1% iv	Tested with known input voltages. TI indication is in terms of velocity related to input voltage.
Displacement	Range: 0.0005 to 0.5000 in. p–p fs Tolerance: ±2% fs	Tested with known input and voltage.
Bandpass filters	J10 filter: 25 to 130 Hz J11 filter: 130 to 310 Hz	Tested with known frequency inputs.
LTCT 9282 Vibration Transducer		
Coil resistance	Resistance: 800 W Tolerance: ±15%	Measured with a DMM.

Figure 5F. Sample ICP Section 1 (Vibration Test Set)

TI Characteristics	Performance Specifications	Test Method
Sensitivity	105 mV avg./in./sec into a 10 kW load Tolerance: ±5 mV Dynamic range: 0.2 in. p–p, 1 to 50 g peak Frequency range: 50 to 500 Hz Tolerance: ±10% iv	Calculated after testing with a vibration calibrator and DVM.
LTCT 22031–01 and LTCT 9282		
System test	Velocity: 10 ips avg. at 50 Hz Displacement: ±0.1 in. p–p at 50 Hz Tolerance: ±10% fs	Compared with a vibration calibrator.

Figure 5F. Sample ICP Section 1 (Vibration Test Set) (Continued)

3.5 PREPARATION OF SECTION 2 (EQUIPMENT REQUIREMENTS)

3.5.1 **Purpose in ICP**. The purpose of Section 2 of the ICP is to designate calibration equipment that will perform the required tests of Table 1 within allowable uncertainties. In addition, Section 2 defines the minimum performance requirements of the calibration equipment to facilitate substitution when the recommended equipment is not available. Accessories needed for the calibration (adapters, special cables, etc.), their salient characteristics, and source of supply are also listed. The data in Section 2 are presented in tabular format; headings for each column are defined below:

a. Item. The generic term for the calibration equipment.

b. Minimum Use Specifications. The minimum performance capabilities (i.e., range, tolerances, etc.) of the required calibration equipment.

c. Calibration Equipment. The manufacturer and model number of recommended equipment(s) that meet the minimum use specifications.

Section 2 also contains standard boiler plate paragraphs, as found in Appendix E, relative to selection of Section 2 equipment and minimum use specifications.

3.5.2 **Procedure for Preparation of ICP Section 2**. Preparation of Section 2 is typically accomplished as follows. (The applicable boiler plate in Appendix E may be used in the preparation of Section 2):

3.5.2.1 **Item**. Determine the generic class of calibration equipment or accessory required to perform the tests and checks identified in Table 1 of the ICP. For example, Electronic counter, Oscillator, Power meter, etc. (Refer to the Navy Calibration Equipment List (NCE) and Generic Name and Coding System (GNC) as necessary for guidance on generic names.) List the equipments in the order planned for use in the procedure. Identify the first item selected as 2.1; e.g., 2.1 Electronic Counter. The second, third, etc. items will become 2.2, 2.3, etc. If more than one of a given item is required, indicate the quantity. If the standard is comprised of a number of components, list individual “consist of” items.

When listing equipment or standards, use generic rather than specific nomenclature. For example, use “Oscillator”, not “Wide range oscillator” or “Test oscillator”. There are exceptions. For example, a procedure may require several signal generators to cover a broad frequency range. To distinguish the actual signal generator to be used in the ICP, names such as signal generator, UHF signal generator, and microwave signal generator should be used in the Item column. Use initial capital letters only for the first word; e.g., Signal generator, Time mark generator. For abbreviations, use all capital letters; e.g. EVM, VHF signal generator, DVM.

3.5.2.2 **Minimum Use Specifications/Test Accuracy Ratio Requirements**. The “Minimum Use Specifications” of the calibration equipment or standards are provided in Section 2 to identify the specific measurement characteristics and related uncertainties required of the proposed calibration equipment and to assist calibration personnel in determining the adequacy of standards or equipment to be used as substitutes in the procedure. The ICP preparer should list the minimum capabilities required of the calibration equipment to adequately test or check a given TI characteristic to its associated performance specification (as specified in Table 1 of the ICP) while maintaining a Test Accuracy Ratio (TAR) of 4:1 or better. TAR is defined as the ratio of the TI tolerance to the uncertainty of the standard or calibration system for a given characteristic. The TAR is computed for each test by dividing the TI tolerance by the uncertainty of the standard or calibration system involved in measuring the specific TI characteristic.

The ICP writer should also determine if a Report of Calibration may be required for a particular standard. Three predominant criteria are used to examine the possible requirement for a Report of Calibration. These are:

1) Standard needs to be calibrated more accurately or outside of the manufacturer’s specifications.

2) Test Accuracy Ratio between standard and unit under test is less than 4:1.

3) Standard requires special/unique test point, i.e., only specific frequencies or power levels.

3.5.2.2.1 **Computing the TAR**. In computing the TAR, all numbers should be in terms of the same measurement units (e.g., volts, ohms, etc.) and not percentages or parts per million (ppm) unless percentages or ppm are the measurement units (e.g., voltage divider linearity). This method of computation is especially applicable to measurements which utilize analog devices as illustrated by the following example: If a ±1% of full scale 0–15 psig working pressure gage were to be calibrated against a ±0.1% of full scale 0–100 psig precision pressure gage, it would appear that there is a 10:1 test accuracy ratio if only percentage uncertainties were compared. However, since the percentage uncertainties for both test and precision gages apply to the fullscale values, in terms of measurement units the calibration tolerance of the test gage is ±0.15 psig (±1% of 15 psig) and the measurement uncertainty of the precision pressure gage is ±0.1 psig (±0.1% of 100 psig). The true test accuracy ratio is then 1.5:1 rather than 10:1 and the precision gage does not provide the minimum 4:1 test accuracy ratio requirement. The ICP preparer should document TAR calculations for each parameter and ensure that the results are recorded in the Equipment Jacket (EJ) of the affected ICP.

A TAR goal of at least 4:1 has been established within the Navy METCAL program to minimize erroneous acceptance or rejection decisions based on calibration results. (NAVAIR 17–35TR–1 provides additional discussion of TAR and its impact on test results). If a 4:1 TAR is not feasible because of state–of–the–art or other technological considerations, the best accuracy attainable should be utilized and a note be provided in Section 1 of the procedure identifying the accuracy ratio used for the parameter being tested. If test equipment limitations warrant downgrading the specifications of the TI (with no adverse impact on the user requirements), a note shall be provided in Section 1 of the procedure identifying 1) the specifications to which the TI was tested, and 2) the requirement to use a Special Calibration label on the TI stating the downgraded specifications. The ICP preparer should ensure that the rationale for TAR deviations from the 4:1 goal and downgrading of the TI specifications is recorded in the EJ of the affected ICP.

3.5.2.2.2 **Minimum Use Requirements**. The minimum use requirements should be those required by the procedure, not the manufacturer's specifications. If a frequency of ±1% tolerance is to be measured, the electronic counter uncertainty requirement is ±0.25% (which provides a 4:1 TAR). The electronic counter uncertainty listed may be specified as ±0.01 ppm (±0.000001%) by the manufacturer, but the only requirement in the ICP is that it must meet the procedure minimum use requirement. Use NA (not applicable) if an uncertainty specification is not required. Where appropriate, use a qualifier for the uncertainty requirement such as iv or fs.

When verifying a TI characteristic using the combination of several standards, where there is no single standard which controls the uncertainty of the set of standards (i.e., monitors the rest for accuracy purposes and is thus the only standard which requires accuracy), then a system uncertainty will need to be applied to the whole set of standards. It is recommended that this system uncertainty be determined using the Root–Sum–of Squares (RSS) method. (NAVAIR 17–35TR–1 provides additional discussion of the RSS method and how to implement it.)

When the use of a particular standard requires a Report of Calibration, the "Minimum Use Specifications" section for the standard should include the general information about the standard (frequency range, nominal value, etc.) and should also indicate that a Report of Calibration is required. A message similar to the following should be included: "Accompanied by a Report of Calibration from an NSL (at values) (for frequencies)". The "at values" and "for frequencies" should be filled in with the particular parameters for which the Certification Chart is required, as applicable. Also, the minimum uncertainty requirement of the Report of Calibration values should be stated so as to achieve the 4:1 TAR. Navy Primary Standards Lab (NPSL) San Diego should be notified of all procedure actions which require Report of Calibrations along with the pertinent technical information concerning what is required to be on the Report of Calibration.

3.5.2.3 **Calibration Equipment Selection**. The equipment listed under the "Calibration Equipment" column in Section 2 should be consistent with the test method designated in Table 1 and have performance capabilities equal to or better than the stated minimum use specification. In addition, consideration should be given to the type and location of the calibration activity using the ICP (e.g., Navy Calibration Laboratory (NCL), Field Calibration Activity (FCA), shipboard laboratory, shorebased laboratory, etc.), and the planned calibration support approach (e.g., on–site, in–situ, in–lab, etc.). This information will assist in determining required equipment characteristics with regard to configuration, portability, environmental specifications, etc. In addition, electrical and physical interface requirements should be considered if the equipment is to be part of a system.

In general, the first item listed should be the "standard" item listed in the Navy Calibration Equipment List (NCE). Substitute items found in NCE should be included if possible. Consideration should also be given to authorized equipment allowances at applicable support sites. Further instructions for entries in the "Calibration Equipment" column are:

a. Use of the term "no substitute" should be avoided unless it has been definitely determined that only one listed standard will meet the requirements of the procedure.

b. Ensure that all items listed meet the Minimum Use Specifications.

c. Provide the manufacturer and model number of the equipment recommended for use.

d. Spell out the manufacturer's name.

e. Do not use three–letter codes or abbreviations.

When reviewing the standards to be used in an ICP, the writer should ensure the following:

a. Equipment to be used in an ICP is in the NCE. If the item is not in the NCE and does not have a peculiar application, the writer needs to submit the equipment information for addition to the NCE before the ICP goes to publication.

b. Equipment to be listed in an ICP is listed in the METRL with an approved calibration interval.

c. The type of laboratory using the ICP has the standards listed in inventory or a procurement for the standards is in progress. The ICP will not be published otherwise.

3.5.2.4 **Listing of Accessories**. Accessories listed in Section 2 should be adequately identified to permit selection or procurement by the calibration laboratory. The salient characteristics of the accessory should be listed in the "minimum use" specification column and the source of supply provided in the "calibration equipment" column. Reference data, drawings, manufacturer's part number, and other pertinent data should be provided as applicable. If the item is generally available to a calibration laboratory, the term "local supply" or "stock item" should be used.

3.5.3. **Examples of Section 2**. Figure 6 illustrates a completed Section 2 for typical ICPs. It should be noted that the examples are provided to illustrate typical entries for a variety of calibration equipment. They are not to be used for guidance in format. Appendix A (ICP–000) is provided for style and format purposes.

EXAMPLES OF ICP SECTION 2

NOTE

The following examples illustrate typical section 2 entries for a variety of calibration equipment. They are not to be used for guidance in format. Appendix A (ICP–000) is provided for style and format purposes.

Figure

6A Scalar Network Analyzer (Illustrates listing of accessories and designation of "local supply").

6B VOR/ILS/MB Ramp Test Set (Illustrates designation of "no substitute" for selected items).

6C Peak Power Meter System (Illustrates designation of "Local supply" for an accessory; requirement for a Characterization Chart for a calibration standard).

6D Hydraulic and Pneumatic Pressure Gages and Switches (Illustrates designation of applicable Federal and Military Specifications as minimum use specification for calibration equipment, and illustrates designation of "NA" for uncertainty of selected calibration equipment).

Figure 6. Examples of ICP Section 2

SECTION 2

EQUIPMENT REQUIREMENTS

NOTE

Minimum use specifications are the principal parameters required for performance of the calibration, and are included to assist in the selection of alternate equipment, which may be used at the discretion of the using laboratory. Satisfactory performance of alternate items shall be verified prior to use. All applicable equipment must bear evidence of current calibration.

The instruments utilized in this procedure were selected from those known to be available at Navy calibration facilities, and the listing by make or model number carries no implication of preference, recommendation, or approval for use by other agencies. It is recognized that equivalent equipment produced by other manufacturers may be capable of equally satisfactory performance in this procedure.

Table 2. Equipment Requirements

Item	Minimum Use Specifications	Calibration Equipment
2.1 Detector	Hewlett–Packard detectors compatible for use with the TI	Hewlett–Packard 11664A, 11664AOPT910, 11664D, 11664E, or 85025 series
2.2 Sweep oscillator	Frequency: 50 MHz Leveled output power: ≥+16 dBm[1] Other Capabilities: 0–10 V Sweep Out ramp; Positive z–axis blanking; HP–IB programmability	Hewlett–Packard 8350B or 8350BOPT907 with RF Plug–in unit 83592B (S/N prefix 2410 or higher) installed; or 8340A or 8340B
	Frequency: 33 GHz[3] Leveled output power: ≥+8 dBm Other capabilities: 0–10 V Sweep Out ramp; Positive z–axis blanking; HP–IB programmability	Hewlett–Packard 8350B or 8350BOPT907 with RF Plug–in unit 83592B (S/N prefix 2410 or higher), and with a 83554A mm–Wave Source Module
2.3 RF amplifier[2]	Power output: >+16 dBm Gain: 10 dB minimum Frequency: 50 MHz	ENI 525LA, 601L, 603LN, or 510L
	Compatible for use with the 83554A mm–Wave Source Module[3]	Hewlett–Packard 8349B
2.4 Coaxial RF cable	Frequency: 50 MHz Connectors: Type N (male)	Local supply

[1] If the sweep oscillator used does not have ≥+16 dBm output capability, use the RF amplifier.
[2] Item 2.3 is needed only if the sweep oscillator to be used does not have ≥+16 dBm output capability.
[3] Required only if the detector used is the H–P 11664D.

Figure 6A. Example of ICP Section 2 (Scalar Network Analyzer)

Item	Minimum Use Specifications	Calibration Equipment
2.5 Step attenuator	Ranges: 0 to 7 dB (1 dB steps) and 0 to 70 dB (10 dB steps) Connectors: Type N (female) Calibrated at 50 MHz to 0.01 dB resolution and ±0.02 dB/10 dB accuracy (see Appendix A)	Hewlett–Packard 355COPT001 and 355DOPT001 connected in series (locally assembled hybrid) (See Appendix A); or Weinschel AF119A99–43
	Range: 0 to 68 dB[3] Connector flange: WR28 Calibrated at 33 GHz to 0.01 dB resolution and ±0.02 dB/10 dB accuracy (see Appendix A)	Hewlett–Packard R382A (2 required) connected in series (locally assembled hybrid) (See Appendix A)
2.6 Fixed attenuator	Attenuation: 3 dB Uncertainty: NA Frequency: 50 MHz	Hewlett–Packard 8491BOPT003; or Weinschel 2–3
2.7 Low pass filter	Cut–off frequency: 76 MHz Insertion loss: not more than 0.4 dB up to 0.8 f_c In–band VSWR: 1.5 max.	Telonic TLC76–7EE2
2.8 Oscilloscope	Frequency range: DC to ≥1 MHz Horizontal sweep: 5 ms/div Vertical sensitivity: 1 V per division Uncertainty: ±3%	Tektronix 7904AOPT03, 7904OPT03, 7704AMOD129GOPT03, or 7704AMOD129G with 7B53A and 7A26 plug–ins; or 2445OPT010, 2445BOPT010, or 2430A
2.9 Termination feedthrough	Impedance: 50 ohms Power: 200 mW	Tektronix 011–0099–00, 011–0049–00, or 011–0049–01
2.10 Electronic counter	Frequency range: 27 to 28 kHz Uncertainty: ±0.003 kHz Frequency resolution: ≤1 Hz Time interval range: 0.00 to 18.00 ms Uncertainty: ±0.09 ms Time interval resolution: ≤10 ns	Hewlett–Packard 5335AOPT010, 030, 040, 5345AOPT012, or 5345A
2.11 Coaxial gage	±0.001 inch	Maury Microwave A–007A or A–007 (Type N)
2.12 Cables, adapters, etc.	As required	Local supply

[3] Required only if the detector used is the H–P 11664D.

Figure 6A. Example of ICP Section 2 (Scalar Network Analyzer) (Continued)

SECTION 2

EQUIPMENT REQUIREMENTS

NOTE

Minimum use specifications are the principal parameters required for performance of the calibration, and are included to assist in the selection of alternate equipment, which may be used at the discretion of the using laboratory. Satisfactory performance of alternate items shall be verified prior to use. All applicable equipment must bear evidence of current calibration.

The instruments utilized in this procedure were selected from those known to be available at Navy calibration facilities, and the listing by make or model number carries no implication of preference, recommendation, or approval for use by other agencies. It is recognized that equivalent equipment produced by other manufacturers may be capable of equally satisfactory performance in this procedure.

Table 2. Equipment Requirements

Item	Minimum Use Specifications	Calibration Equipment
2.1 Extender card	No substitute	Tel–Instrument Corporation P/N 8003–0001
2.2 DMM	DC voltage range: 8 to >14 V dc Uncertainty: ±1% AC voltage range: 15 to 230 V rms Uncertainty: ±1%	Fluke 8506AAN, 8502AAT, 8840AAFOPT005, 8600AOPT001 or 8800A/AA
2.3 Autotransformer	Voltage output: 230 V rms Uncertainty: N/A	Penril W50HM; or Genrad W50HM or W5G3M
2.4 DC power supply	Voltage use: +11.5 V dc Uncertainty: N/A	Hewlett–Packard 6205COPT011 or 6228B
2.5 Calibrator	RF frequency range: 75 to 350 MHz AM modulation range: 15% to 45% Uncertainty: ±1% Capable of outputting detected modulated signal	Hewlett–Packard 8902AOPTE41, 8902AOPTE04, or 8902AOPTE02
2.6 Electronic counter	Frequency range: 25 Hz to 335 MHz Uncertainty: ±0.0005% Input impedance: 50 ohms	Hewlett–Packard 5334BOPT010, 030, 040, 5345AOPT012, or 5345A
2.7 Power meter	Power display range: +5 to +20 dBm Uncertainty: ±0.25 dB (when combined with power sensor cal factor uncertainty)	Hewlett–Packard 436AOPT022, 436A, or 437B

Figure 6B. Example of ICP Section 2 (VOR/ILS/MB Ramp Test Set)

Item	Minimum Use Specifications	Calibration Equipment
2.8 Power sensor	Frequency range: 75 to 350 MHz Power level range: +5 to +20 dBm	Hewlett–Packard 8481B or 8481H
2.9 Distortion analyzer	Audio distortion range: capable of measuring distortion from >10% down to <5% Uncertainty: ±1%	Hewlett–Packard 8903BOPT050,907,910, 8903BOPT9078, or 334A; or Sound Technology 1700BOPT003,005
2.10 Oscilloscope	Vertical sensitivity: 50 mV/div to 1 V/div, continuously variable Bandwidth: usable to 350 MHz Sweep time: 1 ms/div to 0.1 ms/div, main; 5 ms/div and 10 ms/div, delayed	Tektronix 7904AOPT03, 7904OPT03, 7704AMOD129GOPT03, or 7704AMOD129G with 7A26 and 7B53A or 7B92A plug–ins
2.11 Zero indicator for omni range (ZIFOR)	No known substitute	Collins Avionics 478A–3
2.12 Adapters, tees, etc.	As required	Local supply

Figure 6B. Example of ICP Section 2 (VOR/ILS/MB Ramp Test Set) (Continued)

SECTION 2

EQUIPMENT REQUIREMENTS

NOTE

Minimum use specifications are the principal parameters required for performance of the calibration, and are included to assist in the selection of alternate equipment, which may be used at the discretion of the using laboratory. Satisfactory performance of alternate items shall be verified prior to use. All applicable equipment must bear evidence of current calibration.

The instruments utilized in this procedure were selected from those known to be available at Navy calibration facilities, and the listing by make or model number carries no implication of preference, recommendation, or approval for use by other agencies. It is recognized that equivalent equipment produced by other manufacturers may be capable of equally satisfactory performance in this procedure.

Table 2. Equipment Requirements

Item	Minimum Use Specifications	Calibration Equipment
2.1 Coaxial gage	Resolution: ±0.001 inch	Maury Microwave A–007A or A–007
2.2 Pulse generator	Amplitude: 3 to 5 Vpk positive Pulse width: 1 to 10 ms Pulse repetition frequency: 10 to 100 kHz	Hewlett–Packard 8116AOPT001, 8160A, or 8112A
2.3 Termination, feedthrough	Impedance: 50 W Power rating: 1/2 W	Tektronix 011–0099–00, 011–0049–01, or 011–0049–00; or Hewlett–Packard 10100C or 10100A
2.4 Sweep generator	Frequency range: 30 MHz to 26.5 GHz[1] Output level: +10 to –80 dBm[2], into 50 W Uncertainty: NA Capable of being externally pulse modulated, with risetime <1 ms	Hewlett–Packard 8340B, 8340A, or 8350B with 83595A plug–in

1. The sweep generator low frequency end is required only to be 750 MHz if the TI Detector is a model 16936 or 17266. Also, the sweep generator high frequency is required only to be 18 GHz if the TI Detector is a model 16934 or 16936.
2. If the H–P 8350B and 83595A plug–in are to be used, the output power level may be reduced to –80 dBm using the 10 dB step attenuator (item 2.22).

Figure 6C. Example of ICP Section 2 (Peak Power Meter System)

Item	Minimum Use Specifications	Calibration Equipment
2.13.1b SWR bridge #2	Frequency range: 2 to 18 GHz Directivity: 38 dB min. Open/Short ratio: ≤1 dB	87A50–1
2.13.2 Adapter	Type N–female to APC–7	34NF50
2.13.3 Open/Short	Connectors: Type N male	22N50
2.14 Spectrum analyzer	Frequency range: 30 MHz to 18 GHz[4] Dynamic range: >40 dB	Hewlett–Packard 8562AOPTE50, 8562AOPTE51, or 8566B
2.15 W/G directional coupler	Coupling: 10 dB Frequency range: 18 to 26.5 GHz Directivity: 40 dB min.	Hewlett–Packard K752C
2.16 Power meter #2	Power display range: 0 to –60 dBm Uncertainty: ±3% iv Compatible with item 2.17	Hewlett–Packard 436AOPT022 or 436A
2.17 Power sensor	Frequency range: 18 to 26.5 GHz Compatible with item 2.16 Accompanied by an NSL Report of Calibration at 23 and 26.5 GHz	Hewlett–Packard 8485A
2.18 W/G isolator	Frequency use: 23 and 26.5 GHz Isolation: 25 dB min. VSWR: 1.15 max.	3 DBM Co. KWI22SH; or E & M Labs K110LIA
2.19 W/G adapter (3 required)	Frequency use: 23 and 26.5 GHz Connectors: W/G to 3.5 mm (female)	Hewlett–Packard K281C or K281COPT012
2.20 K–connector open/short	Connectors: Type K male	Wiltron 22K50
2.21 Directional coupler	Coupling: 20 dB nom. Frequency use: 1.0 GHz	Narda 3002–20 or 3002–20–01
2.22 Step attenuator (2 required)[5]	Frequency use: 1.0 GHz Attenuation: 0 to 50 dB (in 10 dB steps) Uncertainty: NA	Hewlett–Packard 355DOPT001 or 8496BOPT001

4. The low frequency end is required only to be 750 MHz if the TI Detector is a model 16936 or 17266.
5. Two step attenuators are required only if the sweep generator (item 2.7) to be used is a H–P 8350B with 83592B plug–in; otherwise, only one step attenuator is needed.

Figure 6C. Example of ICP Section 2 (Peak Power Meter System) (Continued)

Item	Minimum Use Specifications	Calibration Equipment
2.23 Amplifier	Frequency use: 1 GHz Gain: 25 to 45 dB Power capability: 100 mW (+20 dBm)	Hewlett–Packard 489A; or Electronic Navigation Industries 601LN or 603LN
2.24 Coaxial adapter (3 required)	Type “BNC” female to double banana plug	ITT Pomona Electronics 1269; or Local supply
2.25 Shorting bar	Double banana plug	ITT Pomona Electronics 1855: or Local supply
2.26 BNC tee	Type “BNC” tee (F–M–F)	Local supply
2.27 Isolators, coaxial	Isolation: 15 dB min. Frequency: 4.0, 10, and 18 GHz Type: coaxial, 4 to 18 GHz	<u>4.0 GHz</u> Passive Microwave Technology STH2051N; or 3 DBM Co. S30S; or E & M Labs S11PS; or Sperry D44S15 <u>10 GHz</u> Passive Microwave Technology XTG2011N; or 3 DBM Co. CX90S; or E & M Labs CX20PS; or Sperry D44X15 <u>18 GHz</u> Passive Microwave Technology PTG2017N
2.28 Low pass filter	Cut–off frequency use: 75 MHz Rejection: 20 dB min. at 2nd harmonic	Telonic TLC76–7EE2; or Sierra 184–76
2.29 Counter calibrator	Delay: 0.01 ms Repetition rate: 1 kHz Uncertainty: ±0.0025%	Argo Systems AS210A14 (with AS210–01A and AS210–04 modules installed)
2.30 Instrument controller	Programmable using diskette NAVAIR 17–20MSYS–036D IEEE–488 GPIB test, version 2 or 3 (or 4)	Fluke 1722A/AP
2.31 Microwave amplifier	Frequency range: 4 to 18 GHz Gain: 15 dB minimum Power capability: +10 dBm	Hewlett–Packard 8349B

Figure 6C. Example of ICP Section 2 (Peak Power Meter System) (Continued)

This page left intentionally blank.

SECTION 2

EQUIPMENT REQUIREMENTS

NOTE

Minimum use specifications are the principal parameters required for performance of the calibration, and are included to assist in the selection of alternate equipment, which may be used at the discretion of the using laboratory. Satisfactory performance of alternate items shall be verified prior to use. All applicable equipment must bear evidence of current calibration.

The instruments utilized in this procedure were selected from those known to be available at Navy calibration facilities, and the listing by make or model number carries no implication of preference, recommendation, or approval for use by other agencies. It is recognized that equivalent equipment produced by other manufacturers may be capable of equally satisfactory performance in this procedure.

Table 2. Equipment Requirements

Item	Minimum Use Specifications	Calibration Equipment
2.1 Pressure calibration system	Pneumatic and hydraulic pressure control unit, amplifier, fluid separators, and standard gage Typical ranges: 0 to 15 psig 0 to 30 psig 0 to 100 psig 0 to 200 psig 0 to 300 psig 0 to 1,000 psig 0 to 3,000 psig 0 to 10,000 psig Uncertainty: ±0.1% fs of each range	King Nutronics 3460 or 3461 King Nutronics 3137 console with a King Nutronics 3194–D Amplifier; or King Nutronics 3524–5–1 Pressure Gage Calibration Panel (Hydraulic) with Heise CMM type gages; or King Nutronics 3525–29–1 Pressure Gage Calibration Panel (Pneumatic) with Heise CMM type gages
2.2 Regulated pressure source	Nitrogen, 2000 psig pressure, Federal Specification BB–N–411C, Type I Gaseous, Grade B–99.50 Percent pure, Class 1 Oil Free, or Military Specification MIL–P–27401C, Type 1	Air Reduction Co. cylinder, with regulator Standard Pneumatic Eng. Co. LC G2–CGA580 Local supply
2.3 Hoses and adapters	As required	Local supply
2.4 Continuity tester	Used to determine point of switch actuation	Simpson 260 or 270–3 or 270–5
2.5 Ruler	Used to measure the height difference between the TI and the fluid separator	Local supply

Figure 6D. Example of ICP Section 2
(Hydraulic and Pneumatic Pressure Gages and Switches)

Item	Minimum Use Specifications	Calibration Equipment
2.6 The effects of temperature on elastic element pressure gages	NA	The effect of temperature on the TI is not tested. If such tests are required/ requested, refer to Metrology Engineering Engineering Report ER–13

Figure 6D. Example of ICP Section 2
(Hydraulic and Pneumatic Pressure Gages and Switches) (Continued)

3.6 PREPARATION OF SECTION 3 (PRELIMINARY OPERATIONS)

3.6.1 **Purpose in ICP**. Section 3 of the ICP covers all preliminary actions and steps to be performed prior to starting the calibration process of Section 4 (Calibration Process) and can assist the technician in planning for efficient use of time and avoiding problems during the calibration. Section 3 may include TI and calibration equipment connections, warm up instructions, visual inspection, setup instructions and other actions which are preliminary to the calibration process in general. Preliminary instructions which are peculiar to individual checks or tests should be placed in Section 4. Section 3 should also identify any equipment or operator hazards or special environmental requirements, including the need for temperature stabilization.

3.6.2 **Warnings, Cautions and Notes**. General considerations relating to personnel health and safety during the calibration process were discussed in paragraph 2.3 preceding. With regard to the calibration procedure, appropriate Warnings, Cautions, or Notes should be included in Section 3 or Section 4 to identify equipment and operator hazards or special conditions that must be observed. These special notations belong in Section 3 if they are of general nature or apply to the system as a whole. A special notation that applies to a specific operation belongs in Section 4 preceding the instruction for that operation. Some conditions that may call for a special notation are:

- Voltages of 45 V or more from low impedance sources
- Compressed air or other gas
- High–level current
- High–temperature baths or ovens
- High–level microwave or RF radiation
- Ultraviolet or infrared radiation
- Toxic and flammable solvents
- Dry ice; liquified gases
- Bottled–gas cylinders
- Heavy objects
- High pressure operations above 100 psig
- Corrosive or toxic pressure medium
- Operation of laser devices
- Possible contact/handling of items at high temperature
- Contaminated instruments or equipment
- Clean for oxygen service

The use of Warnings, Cautions and Notes is further described below:

a. Warnings (designated in all capital letters) should be used to warn against danger to personnel and should precede the applicable text, but follow paragraph headings to which they apply. Warnings should be used when electrical shock hazard, compressed air, high temperature, high power electromagnetic radiation, toxic materials (such as mercury), or any other potentially dangerous environment is present.

b. Cautions (designated in all capital letters) should be used to prevent damage to, or destruction of equipment and should precede the applicable text, but follow the paragraph headlines to which they apply.

c. Notes (designated with initial capitals and lower–case letters) should be used to inform the technician of special considerations or to clarify requirements pertinent to calibration and should precede or follow the applicable text, depending upon material to be highlighted.

   Examples of Warnings, Cautions, and Notes are shown in Figures 7A, 7B, and 7C.

WARNINGS, CAUTIONS, and NOTES

Example of a WARNING as used in a procedure: The procedure up to this point has described temperature measurements on a remote reading thermometer using a King Nutronics Model 3605 Calibrator, wherein the last upper temperature point has just been completed. Procedure steps are as follows:

WARNING

TO AVOID SERIOUS BURNS, DO NOT TOUCH SENSING BULB OR ADJACENT CAPILLARY WHEN REMOVING FROM CALIBRATOR. DO NOT LAY BULB ON COMBUSTIBLE OR LOW MELTING TEMPERATURE MATERIAL.

4.1.9 Remove the sensing bulb from the calibrator well and allow it to cool.

4.1.10 --

Figure 7A. Example of a WARNING

Example of a CAUTION as used in a procedure: The procedure is concerned with calibration of a liquid–filled remote sensing temperature indicating–controller. Up to this point, preliminary requirements have been presented and description of removing the sensing bulb from its installed position is to follow, thus:

CAUTION

EXERCISE CARE WHEN HANDLING THE CAPILLARY TUBING TO AVOID TWISTING OR BENDING TO A RADIUS LESS THAN TWO INCHES.

4.2.1 Using box wrench (item 2.6), loosen union nut on TI bulb located on lower left side of lower purge manifold. Do not loosen or remove thermowell.

Figure 7B. Example of a CAUTION

Example of a NOTE as used in a procedure: The procedure concerns a Differential Pressure Indicator that must be removed from its associated equipment to permit calibration. As part of the PRELIMINARY OPERATIONS, procedure steps are as follows:

3.7 When dehydrator pressure is at atmospheric pressure, remove the Differential Pressure Indicator from top of Prefilter. Exercise care to assure outer seal o–ring and inner d/p seal o–ring remain with the indicator.

NOTE

Outer seal o–ring is an ARP 568–908 while inner seal D/P o–ring is an ARP 568–014.

3.8 Thread DPI into Q–32 Adapter, hand tighten to obtain o–ring seal.

Figure 7C. Example of a NOTE

3.6.3 **Special Environmental Conditions**. If the minimum use specifications of the calibration equipment listed in Section 2 are dependent on special environmental conditions not typical of the laboratory performing the alibration, such environmental conditions should be described in Section 3, together with an explanation of the reasons for the requirement. When applicable, temperature stabilization requirements should be indicated.

3.6.4 **Preliminary Checks and Inspections**. Preliminary checks and inspections may be required in Section 3 to ensure that the TI is in satisfactory operating condition. Examples: TI mechanical and electrical zero checks and adjustments, visual inspections for safety, serviceability or cleanliness, battery checks, checks of vernier controls for sufficient range. In addition, the performance of self–checks/tests or other functional checks may be appropriate.

For programmable instruments, IEEE–488 Interface Bus tests should be performed in Section 3 if the bus is utilized in Section 4 to test TI performance characteristics. Use the following steps as a boilerplate to add the IEEE bus test to the ICP:

3.5 IEEE BUS TEST

NOTE

The IEEE Bus Test programs and their manual supplements [NAVAIR 17–20MSYS–036M (MECCA) or NWAD 35–HBK–1–1 (EzCal) <use current version>] will be used in conjunction with this ICP when performing the IEEE Bus Test. The IEEE Bus Command and expected response (if any) used to test the TI IEEE Bus will come from this ICP.

3.5.1 Refer to NA 17–20MSYS–036M or NWAD 35–HBK–1–1 <use current version> and follow the applicable instructions to test the TI IEEE bus using the following command(s) and verify that the corresponding response is obtained.

3.5.1.1 Using the (“Listen”, “Talk”, or “Talker/Listener”) Bus Command “_____”, verify that the following response is obtained “_____”, on either the TI or instrument controller display.

3.6.5 **Identification of TI Controls and Control Settings**. Control settings should be described as necessary to assure complete understanding of the instructions and protection of equipment. Except for General ICPs, this information should be specific with respect to the TI and in general terms, with respect to the calibration equipment and accessories (See paragraph 3.10 following for exceptions applicable to General ICPs). Chronological order of control settings should be presented in tabular form when required for clarity.

When a switch, control, connector, indicator, or light is labeled on the TI, use that exact term insofar as is possible, written in all capital letters, when referring to it. When a device is not labeled, assign a suitable name, written with an initial capital. Choose a name that describes the device as exactly as possible. For example, call a push button a push button, rather than a “momentary contact switch” or some other vague term. Once a name or nomenclature has been assigned, use it consistently through out the procedure.

In the case where the TI consists of several components, such as Signal Generator, Oscilloscope, Power Supply, etc., the reference to the components or controls on any of the components should include the component name, written with initial capitals. For example, call the power switch on the signal generator component of a TI system the “TI Signal Generator POWER switch”, rather than “TI POWER” switch where there may be more than one TI power switch due to the number of components.

3.6.6 **Interconnection Instructions**. The procedure should specify the type, length and dress of leads, grounding, and relative equipment placement whenever such factors must be controlled to assure a valid calibration. Interconnection information may be described in the text or shown in drawings and/or block diagrams as required for clarity. Information provided in the text should be consistent with diagrams or illustrations provided.

3.6.7 **Procedure for Preparation of ICP Section 3**. Preparation of Section 3 is typically accomplished as follows:

a. Refer to the Section 3 boiler plate, Appendix E, for standard statements that may apply. Verify their applicability or need for modification. (Note that different Section 3 boiler plates are available for electrical/electronic and mechanical equipment.) If applicable, insert the required warm up time for the TI.

b. Assess the overall calibration system to be utilized and identify or locate any equipment or operator hazards, special environmental requirements, or the need for temperature stabilization. If required, prepare any Warnings, Cautions, or Notes, and document any special environmental requirements in accordance with the guidelines provided in paragraphs 3.6.2 and 3.6.3 preceding.

c. Document required preliminary checks and inspections and functional checks; identify TI controls and control settings; and provide interconnection instructions, as applicable, in accordance with the guidelines provided in paragraphs 3.6.4 through 3.6.6 preceding.

3.6.8 **Examples of Section 3**. Figure 8 illustrates the variety of information that may be required in Section 3. Refer to appendix A (ICP–000) for style and format purposes.

EXAMPLES OF ICP SECTION 3

Figure

8A Peak Power Meter System (Illustrates use of CAUTION, NOTE, use of block diagram and reference to an Appendix for coaxial connector critical dimensions).

8B Angle Blocks (Illustrates designation of special environmental conditions and temperature stabilization requirements).

8C B.I.M. Blades Check and Fill Units (Illustrates preliminary operations and typical test configurations for calibrations using an automated pressure calibrator or an air data calibrator).

8D VORS/ILS/MB Ramp Test Set (Illustrates preliminary setup of calibration standards).

8E Ship Service Turbine Generator (SSTG) Tachometer System (Illustrates use of WARNINGS, NOTES, test configuration, and preliminary operations for on–site in–place calibration.

Figure 8. Examples of ICP Section 3

SECTION 3

PRELIMINARY OPERATIONS

3.1 Ensure that all power switches are set to off, and set all auxiliary equipment controls as necessary to avoid damage to the equipment and so that dangerous voltages will not be present on output terminals when the power switches are turned on.

CAUTION

ENSURE THAT THE TI REAR PANEL LINE VOLTAGE SELECTOR IS SET FOR 120 V AC OPERATION AND THAT A 2 AMPERE, 250 VOLT FUSE IS INSTALLED IN THE TI.

3.2 Zero the coaxial connector gage, and verify that the TI Peak Power Meter CALIBRATOR 1 GHz output connector and the TI Detector(s) input connector, as applicable, dimensions are within the tolerance limits shown in Appendix A.

3.3 Connect the TI and all auxiliary equipment to the appropriate power source.

3.4 Turn on all power switches, and allow sufficient warm up time for the equipment (the TI requires 30 minutes warm up time).

3.5 Perform the TI self–test, initialization, and detector calibration as follows:

NOTES

For the preliminary operations, it will be necessary to connect a TI Detector to the TI DETECTOR INPUT.

If the TI is a single channel model which is submitted for calibration with multiple detectors, then connect one of Detectors (see the note following step 3.5.3 for further information) to the TI DETECTOR INPUT connector at this time.

If the TI is a dual channel model and is submitted for calibration with multiple Detectors, then connect two of the Detectors (see the note following step 3.5.3 for further information) to the TI DETECTOR INPUT A and B connectors at this time.

If the TI is a dual channel model and is submitted for calibration with only a single Detector, then connect the Detector (see the note following step 3.5.3 for further information) to the TI DETECTOR INPUT A connectors at this time. It may be necessary to move the Detector occasionally to the TI DETECTOR INPUT B connector for some Channel B setup routines required by the TI (or the CLEAR key may be pressed to bypass these routines).

Figure 8A. Examples of ICP Section 3 (Peak Power Meter System)

3.5.10.3 After the calibration cycle is completed (approximately 50 seconds), disconnect the TI Detector (B) from the CALIBRATOR 1 GHz connector.

3.5.10.4 If necessary, return the TI Detector to the DETECTOR INPUT A connector.

3.5.10.5 Press the TI DETECTOR SELECT A key.

3.6 Monitor Output Check

3.6.1 Connect the equipment as shown in Figure 1.

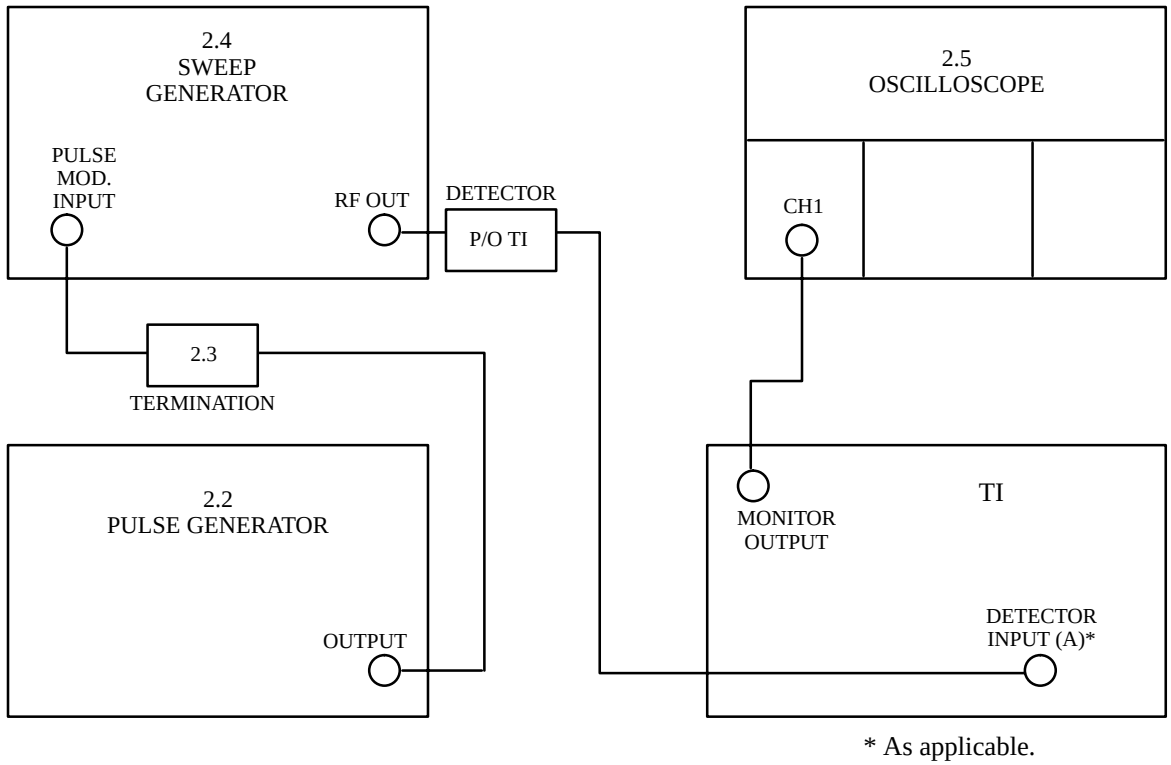

Figure 1. Monitor Output Test Configuration

3.6.2 Set the pulse generator for a 1 μs pulse width at a repetition frequency of 100 kHz and a +5 Volt peak amplitude.

3.6.3 Set the sweep generator for a 0 dBm output level at 1 GHz, and enable the external pulse modulation input.

Figure 8A. Examples of ICP Section 3 (Peak Power Meter) (Continued)

SECTION 3

PRELIMINARY OPERATIONS

3.1 The temperature of the calibration room should be maintained at 68° F to 72° F, with a rate change not to exceed 2° F per hour. Humidity should be between 30% and 50%.

3.2 Clean the TI and auxiliary equipment as required.

3.3 Inspect the TI for nicks, dents, etc. on the measuring or gaging surfaces that would impair the accuracy of the results.

3.4 Remove the imperfections, as necessary, with a hard Arkansas Stone.

3.5 Use a camel's hair brush to remove dust particles on the instrumentation whenever required.

Figure 8B. Examples of ICP Section 3 (Angle Blocks)

This page left intentionally blank.

SECTION 3

PRELIMINARY OPERATIONS

WARNING

ENSURE THAT THE HYDROSTATIC TEST DATE FOR THE TI INTERNAL OR EXTERNAL CYLINDERS HAS NOT EXPIRED, AND WILL NOT EXPIRE WITHIN THE NEXT CALIBRATION INTERVAL. THE LAST TEST DATE IS STAMPED ON THE CYLINDERS AND THE RETEST DATE MAY BE ON A SPECIAL DECAL ON THE TI FRONT PANEL. THE CYLINDERS SHOULD BE TESTED EVERY 5 YEARS.

3.1 Ensure that the TI is clean and free from defects that would impair its operation.

3.2 If applicable, connect the air data calibrator (item 2.1), referred to herein as the ADC, to an appropriate power source, and depress the POWER pushbutton to on. Allow 1 hour for warm up.

3.3 If applicable, connect the automatic pressure calibrator (item 2.2), referred to herein as the APC, to an appropriate power source, and set the POWER switch to on. Allow 1 hour for warm up.

3.4 Ensure that the nitrogen cylinder (item 2.3) is charged sufficiently with clean, dry nitrogen for the calibration measurements.

3.5 Ensure that the vacuum pump (item 2.4) is in good operating condition and is filled to the proper level with the specified pump oil.

3.6 Ensure that the TI system is at atmospheric pressure; vent the system to the atmosphere, as required.

3.7 Locate the nitrogen supply within 5 feet of the ADC or APC intensifier unit, as applicable. Secure the nitrogen supply to a stable structure with the nylon strap.

3.8 If the ADC is to be used, perform the following preliminary operations:

3.8.1 Ensure that the ADC initially displays: “3688A Self Test”. Also, ensure that after approximately 20 seconds, the TI displays:

“ELECTRONICS SELF TEST COMPLETE”
“NO ERRORS DETECTED”

3.8.2 Depress the A in “Advance” on the ADC display. Ensure that the ADC now displays the following:

P_S = TRANSDUCER IN WARM–UP
P_{T1} = TRANSDUCER IN WARM–UP
P_{T2} = TRANSDUCER IN WARM–UP

3.8.3 Ensure that the ADC displays the “SELECT SYSTEM MODE” scenario.

3.8.4 Connect the equipment as shown in Figure 1.

Figure 8C. Examples of ICP Section 3 (B.I.M. Blades Check and Fill Units)

3.9 If the APC is to be used, perform the following preliminary operations:

3.9.1 Ensure that the APC control unit EMERGENCY VENT valve is closed (knob up).

3.9.2 Set the APC intensifier controls as follows:

VENT valve	closed
PRESSURE valve	closed
PRESSURE ADJUST switch	1000 initial setting
POWER switch to	off

3.9.3 Depress the intensifier OIL LEVEL CHECK switch, check the oil level in the hydraulic reservoir, using the dipstick attached to the FILL–VENT plug. If the oil level is below the lower mark, add MIL–H–5606 hydraulic fluid to bring the oil level to the upper mark. Leave the FILL–VENT plug loosened by about two turns for venting.

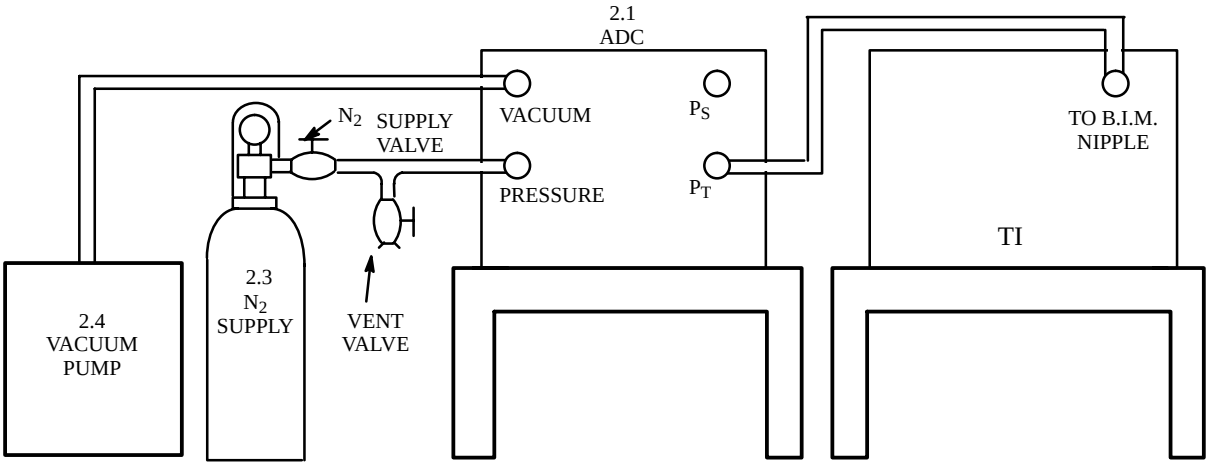

Figure 1. Absolute Pressure Gage Test Configuration Using the ADC

3.9.4 Connect the APC intensifier to an appropriate power source and depress the POWER switch to on.

3.9.5 Ensure that the APC display indicates “ELECTRONICS OK PUSH ADV”; if so, touch ADV.

NOTE

If an error message appears, turn the POWER switch off, then on to repeat the electronics self test. If the message repeats, interpret the error message and take the indicated corrective action.

Figure 8C. Examples of ICP Section 3
(B.I.M. Blades Check and Fill Units) (Continued)

3.10 If the APC is to be used immediately in calibrating the TI absolute pressure gage, connect the equipment as follows:

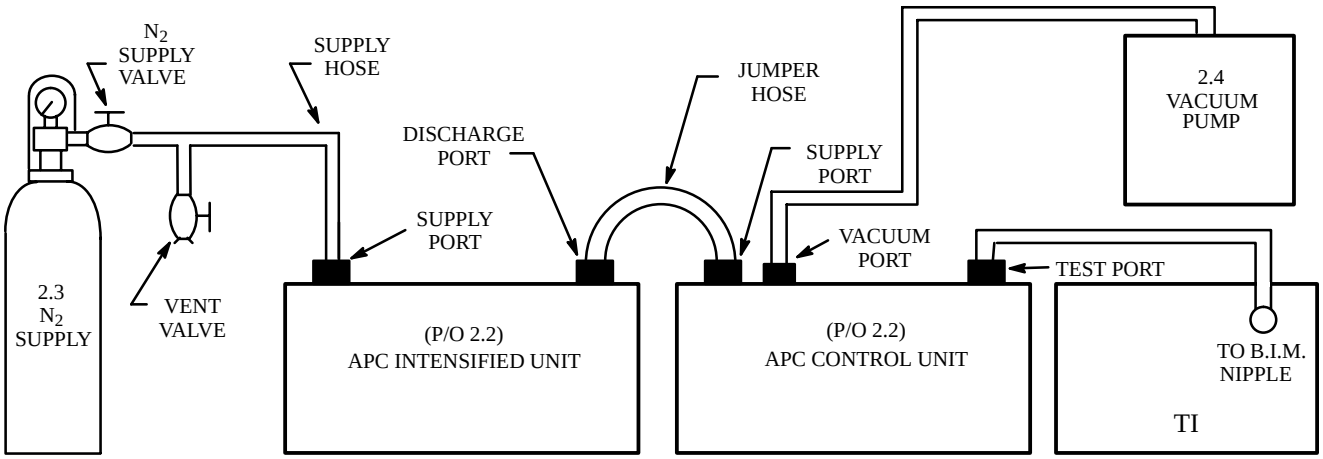

Figure 2. Absolute Pressure Gage Test Configuration Using the APC

3.11 Ensure that the nitrogen supply vent valve is closed. Open the nitrogen supply valve slowly, and ensure that the supply hose connections are free from leakage.

3.12 Set the nitrogen cylinder regulator output to 30 psig.

Figure 8C. Examples of ICP Section 3
(B.I.M. Blades Check and Fill Units) (Continued)

This page left intentionally blank.

SECTION 3

PRELIMINARY OPERATIONS

3.1 Ensure that all power switches are set to off, and set all auxiliary equipment controls as necessary to avoid damage to the equipment and so that dangerous voltages will not be present on output terminals when the power switches are turned on.

3.2 Set the TI TEST SET POWER switch to OFF, the AC POWER switch to OFF, and the AC INPUT switch to 115 V ac.

3.3 Connect the TI to a 115 V ac, 60 Hz power source.

3.4 Set the TI AC POWER switch to ON, and allow the TI battery to charge for 16 hours.

3.5 Set the TI AC POWER switch to OFF, and disconnect the TI from the 115 V ac, 60 Hz power source.

3.6 Connect the auxiliary equipment to the appropriate power source.

3.7 Turn all auxiliary equipment power switches to on, and allow a sufficient warm up time for the equipment. (Perform steps 3.8 through 3.41 during the equipment warm up time. Perform steps 3.42 through 3.42.5 after the equipment warm up time.)

3.8 Remove the TI chassis assembly from the TI case.

NOTE

In the following steps, ensure that the TI A1, A2, and A3 boards and the extender board are plugged into the TI chassis assembly in the same direction. Also, inspect the pins of the extender board before use for shorts.

3.9 Remove the TI A1, A2, and A3 boards from the TI chassis assembly.

3.10 Plug the extender board into the J3 slot of the TI chassis assembly and then plug the TI A3 board into the extender board.

3.11 Remove both of the TI 5 amp DC fuses.

3.12 Set the DMM for autoranging dc voltage measurements.

3.13 Measure the TI battery voltage with the DMM, and verify that it is greater than 13.8 V dc. If not, replace the TI battery and return to step 3.3.

3.14 Connect the TI to a 115 V ac, 60 Hz power source.

3.15 Connect the DMM voltage input HI and LO terminals to the extender board pin 25 and pin 22, respectively. Verify that the DMM indication is between 8.5 and 11.5 V dc.

Figure 8D. Examples of ICP Section 3 (VOR/ILS/MB Ramp Test Set)

3.15 Connect the DMM voltage input HI and LO terminals to the extender board pin 25 and pin 22, respectively. Verify that the DMM indication is between 8.5 and 11.5 V dc.

3.16 Set the DMM for autoranging ac voltage measurements.

3.17 Connect the DMM voltage input HI and LO terminals to the extender board pin 24 and pin 23, respectively. Verify that the DMM indication is between 16.0 and 20.0 V rms. Disconnect the DMM from the TI.

3.18 Set the TI AC POWER switch to OFF.

3.19 Disconnect the TI from the 115 V ac, 60 Hz power source.

3.20 Set the TI AC INPUT switch to 230 V ac.

NOTE

Ensure that the autotransformer output is set to minimum.

3.21 Connect the DMM input across the autotransformer output, observing proper polarity.

3.22 Connect the TI to the output of the autotransformer.

3.23 Adjust the autotransformer output control for a 230 V rms indication on the DMM.

3.24 Disconnect the DMM from the autotransformer.

3.25 Connect the DMM voltage input HI and LO terminals to the extender board pin 24 and pin 23, respectively.

3.26 Set the TI AC POWER switch to ON.

3.27 Verify that the DMM indication is between 16.0 and 20.0 V rms.

3.28 Set the TI AC POWER switch to OFF.

3.29 Disconnect the DMM from the extender board.

3.30 Adjust the autotransformer output to minimum, and then disconnect the TI from the autotransformer.

3.31 Set the TI AC INPUT switch to 115 V ac.

3.32 Re–install the two 5 amp DC fuses.

Figure 8D. Examples of ICP Section 3 (VOR/ILS/MB Ramp Test Set) (Continued)

SECTION 3

PRELIMINARY OPERATIONS

WARNING

OPENING THE DOOR TO THE GOVERNOR CONTROL ASSEMBLY EXPOSES ELECTRICALLY ENERGIZED TERMINALS THAT ARE POTENTIALLY LETHAL SHOCK HAZARDS. OBSERVE SAFETY PRECAUTIONS TO AVOID ELECTRICAL SHOCK.

NOTE

Ensure that the Ship Service Turbine Generator (SSTG) is quiescent during the calibration.

3.1 Verify that the TI is free from defects that may impair proper operation.

3.2 Ensure that ship power 115 V ac from input of Governor Control Box (GCB) is removed; switch governor circuit breaker to OFF.

3.3 Open the Governor Control Assembly (GCA) by loosing screws; swing the GCA door to the left.

3.4 Locate terminal board TB1 and Power Supply Input 840 Hz, 30 volt, 3 phases.

3.5 At terminal TB1 and Power Supply Input, use the DMM (item 2.3) to verify that there is no ac and dc power existing on terminals 10, 11, 12 and 13 of TB1 and terminals 1, 2 and 3 of Power Supply Input.

3.6 At the 840 Hz Power Supply Input, disconnect leads 1, 2 and 3 (Red, White and Black). Label disconnected leads to prevent accidental shorting.

3.7 At terminal board TB1, disconnect leads TB1–10, TB1–11, TB1–12 and TB1–13. Retighten screws. Label disconnected leads to prevent accidental shorting.

3.8 Connect the test equipment to the digital tachometer system as shown in Figure 1.

Figure 8E. Examples of ICP Section 3
(Ship Service Turbine Generator (SSTG) Tachometer System)

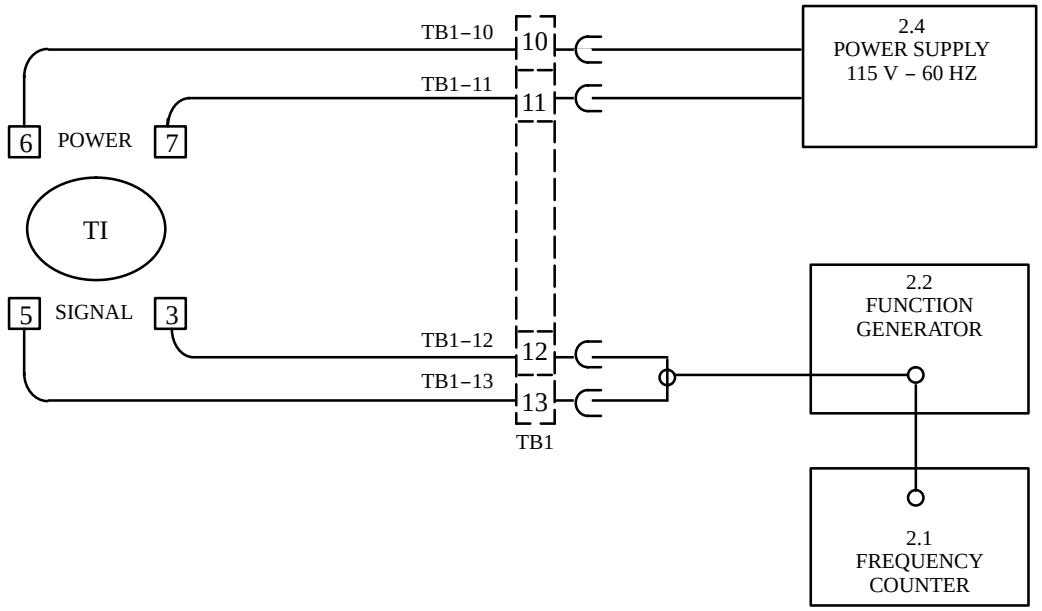

Figure 1. Calibration Test Equipment Configuration

3.9 Connect all test equipment to the appropriate power source, then set all power switches to ON and allow sufficient time for equipment to warm up.

Figure 8E. Examples of ICP Section 3
(Ship Service Turbine Generator (SSTG) Tachometer System) (Continued)

3.7 PREPARATION OF SECTION 4 (CALIBRATION PROCESS)

3.7.1 **Purpose in ICP**. Section 4 of the ICP contains detailed instructions for the performance of the calibration. In addition to the text, Section 4 may contain figures, illustrations, and tabular data as necessary to adequately describe the calibration process.

3.7.2 **General Requirements**. General requirements for the preparation of Section 4 are provided in the following paragraphs.

3.7.2.1 **Clarity and Degree of Detail**. The clarity and degree of detail of the Section 4 instructions should be consistent with the technical complexity required to perform the measurements. Instructions should be sufficiently clear and unambiguous to assure uniform test results when performed by different technicians. The length and content of each step should cover a complete operation, but should be short enough for the technician to retain it in memory while the step is being performed. Additional guidelines to be observed are included in paragraph 2.5 preceding (style and format).

3.7.2.2 **Division of Calibration Process and Test Sequence**. Section 4 should be divided into well defined segments that cover each general calibration area (e.g., DC voltage, DC current, AC voltage, AC current and resistance for a digital multimeter). The segments should be arranged in a logical sequence that corresponds with the listing of Table 1, Section 1 of the ICP. This will keep changes in connections, equipment setups, and control settings to a minimum. See paragraph 3.4.4.3 preceding.

3.7.2.3 **Test Method**s. Test methods should utilize overall performance (black box) testing techniques and meet prescribed accuracy ratio requirements in accordance with paragraph 3.4.4.3, and 3.5.2.2 preceding.

3.7.2.4 **Use of Diagrams, Illustrations and Sample Calculations**. If needed to clarify or simplify instructions, provide block diagram figures in the text. Label all equipment and connections with capital letters and include the equipment item number from Section 2 of the ICP (item 2.1, 2.4, etc.). Drawings, parts lists, schematics, specifications, and other information required to fabricate special fixtures/aids needed in the calibration process should be provided in an appendix. Provide figures to show expected waveforms and to illustrate indications that may not be clearly understood. Except for the simplest calculations, provide an example using typical values.

3.7.2.4.1 If fabrication of a special device (e.g, text fixture, test cable, etc.) is required to perform calibration of the TI, then prior to the procedure publication the cognizant field activity (CFA) for the calibration standards should be provided with the necessary technical information (drawings, parts lists, schematics, etc.) that will be provided in the procedure appendix. This will allow the CFA to review and approve the information for its adequacy and to assess the calibration laboratories ability to manufacture the device. If the calibration laboratory is unable to manufacture the device through lack of appropriate parts or manufacturing equipment, then it is the CFA's responsibility to generate the necessary action to acquire the special devices for the applicable calibration laboratories.

3.7.2.5 **Identification of TI Controls and Control Settings**. See paragraph 3.6.5 preceding.

3.7.2.6 **Interconnection Instructions**. See paragraph 3.6.6 preceding.

3.7.2.7 **Safety Considerations**. See Paragraph 3.6.2 preceding with regard to the use of Warnings, Cautions, and Notes. Potential safety problems can also be reduced through appropriate calibration system configurations, clear instructions, and proper test sequencing.

3.7.2.8 **Adjustment Instructions**. Where feasible, when out–of–tolerance conditions are detected during calibration, appropriate corrective action is indicated. Corrective action may consist of repair and/or alignment of the Test Instrument, or in some cases adjustments may be performed in conjunction with the calibration.

If a calibration adjustment is required in performance of a calibration to correct an out–of–tolerance condition, the adjustment may only be performed after the initial out–of–tolerance data have been recorded; otherwise, the quantitative data needed for establishment and adjustment of calibration intervals would not be retained.

3.7.2.8.1 **Adjustment Criteria**. Where feasible, adjustments that correct out–of–tolerance conditions are to be included in calibration procedures under the following conditions:

a. The adjustment is readily accessible (e.g., via front panel or other exterior access, simple removal of cover plate, etc.)

b. The adjustment is easily performed and saves the technician from having to refer to the maintenance manual and/or adequate information regarding the adjustment is not available from the manual or other sources.

c. Reasonable assurance exists that the out–of–tolerance condition can be corrected by the adjustment without need for other maintenance/repair action.

d. The adjustment instruction is compatible with the calibration equipment setup being used and the test sequence being followed.

e. The adjustment instructions can be included without unduly increasing the length and complexity of the procedure. If this cannot be avoided, the instructions may be included as an appendix to the procedure and clearly distinguished from the calibration process.

f. The adjustment instructions are applicable to all instruments (serial numbers) covered by the ICP.

g. Interactions with other tests or adjustments are adequately covered.

Positioning of the adjustment instructions within the ICP, based on the above criteria, depends on the presence of interactive measurements. This is discussed in paragraph 3.7.2.9 following. In any event, adjustments should not be made until the out–of–tolerance condition has been documented. In providing adjustment instructions, omit detailed instructions for removing cover plates or cases unless some special procedure is required.

3.7.2.9 **Verification and Corrective Action**. Typically, the following boiler plate note applicable to the verification of calibration results and corrective actions associated with a procedure step should be placed at the beginning of Section 4 of the ICP:

NOTE

Unless otherwise specified, verify the results of each test and take corrective action whenever the test requirement is not met before proceeding.

The above note is consistent with the general approach to be taken in Navy ICPs for correcting an out–of–tolerance condition immediately following the procedure step that determined the out–of–tolerance. In those cases where a series of individual measurements interact and the measurement results are affected by corrective action, a statement similar to the following should be inserted: “Do not take corrective action until step __ has been performed”.

3.7.2.10 **Calibration Test Points**. In general, for each TI characteristic being calibrated, the smallest number of test points consistent with obtaining verification of the TI performance over its specified range should be used. The number and choice of required test points will vary, depending on the characteristics of the TI.

Guidance concerning choice of test points for selected generic classes of equipment is contained in Calibration Requirements Documents (CRDs). In some cases, TI application/use requirements will dictate test point selection. Avoid selecting test points where TI performance criteria changes. For example, if an AC Voltmeter has the following accuracy:

±0.01% fs	0 to 100 kHz
±0.05% fs	100 kHz to 10 MHz

Do not choose 100 kHz as a test point since there are two separate criteria at 100 kHz, ±0.01% and ±0.05%. Use points at the upper and lower ends of each frequency range. In this example, 10 kHz and 90 kHz (+0.01%), and 1 MHz and 9 MHz (+0.05%). Otherwise, use the most stringent accuracy measurement.

3.7.2.11 **Designation and Expression of TI Performance Limits**. Performance limits (i.e., ranges and tolerances) should be provided in Section 4 wherever a procedure step requires verification of a given TI performance characteristic and should be consistent with the performance specifications listed in Table 1 of the procedure for each characteristic tested. Exceptions may apply if the procedure covers multiple instruments, in which case the applicable checklist performance limits should be referred to in lieu of listing them in Section 4. In the case of a series of related measurements, the performance limits should be shown in tabular form, including nominal values, tolerance limits, etc. Where only a single measurement is to be performed, the performance limits may be included within the text, e.g., "Verify that the TI amplitude display is within 100–200 mV".

TI performance limits should be expressed in accordance with the following rules:

a. Where possible, tolerances should be expressed as upper and lower limits (e.g., 49 to 51 volts) rather than plus or minus a quantity (e.g., ±1 volt) or plus or minus a percentage (e.g., ±2%). Where the nominal value is not predictable, or is derived during calibration, preference should be given to expressing the tolerance as plus or minus a quantity (e.g., ±3 dB) rather than as plus or minus a percentage of the nominal value. If the standard uses a percent error device, the tolerance should be expressed as ± a percentage within the range of the percent error readout.

b. Whenever possible, the tolerances should be expressed in terms of the measured quantity, thus avoiding the need for the calibration technicians to convert units or apply mathematical formulas. For example, tolerance limits for the amplitude of a signal displayed on an oscilloscope should be expressed as 4.5 to 5.5 cm rather than 31.9 to 38.9 volts rms, since the observed deflection in cm would otherwise require conversion to voltage before it could be compared to the tolerance limits. If the measured quantity might be affected by the substitution of alternate equipment, both units should be included; for example: "Verify that the amplitude of the displayed sine wave signal is 4.5 to 5.5 cm (31.9 to 38.9 volts rms)."

   When a tolerance limit goes from a negative (–) number to a positive (+) number, use both the + and the – signs, for example, –3 dB and +3 dB. If both are positive, do not use the plus (+) sign and place units on the last value only: between 3.0 and 6.0 dB. If both are negative, place the minus (–) sign on both values and place units on the last value only: between –10.0 and –20.0 dB.

c. It may be necessary to perform calculations to establish the performance limits. For example, an instrument's tolerance may be stated by the manufacturer as a percentage of fullscale, or as a percentage of reading plus a constant. When entering the required indications in the procedure, calculate and provide the maximum and minimum values.

d. When required by the TI specification, performance limits should be expressed as single minimum or maximum values (e.g., 2 cm min.).

3.7.3 **Procedure for Preparation of ICP Section 4**. Preparation of Section 4 is typically accomplished as follows:

a. Refer to the Section 4 boiler plate, Appendix E, for standard statements that may apply. Verify their applicability, or need for modification. (Note that the last sentence of the Section 4 boiler plate applies only to equipment with power switches.)

b. Refer to the completed draft of Section 1, Table 1, which lists the TI characteristics to be measured. Enter the first characteristic listed in Section 1 as subsection 4.1.

c. Review the Section 3 draft. Be sure when writing the first test operation (step 4.1.1) that there is no gap or omitted operation between the Section 3 preliminary operations and step 4.1.1.

d. Proceed to document the calibration process in the sequence listed in Table 1. Refer to Table 1 and Section 2 for applicable performance specifications, test methods, and calibration equipment to be utilized. Refer to the operation and maintenance manuals for the TI and calibration equipment to establish required test configurations, identify TI and calibration equipment controls and control settings, prepare diagrams and illustrations, etc. If available, Measurement Systems Operation Procedures (MSOPs) should be reviewed for documented test methods and test configurations. An already existing procedure for the same or similar TI may also be of value (see paragraph 2.2 preceding for applicable documentation).

e. Note that it may be necessary to deviate from the test sequence presented in Table 1. If this occurs, revise Table 1 accordingly.

f. If the TI and calibration equipment are available, calibration procedure development and evaluation will be facilitated by working through each step.

g. The general requirements presented in paragraph 3.7.2 preceding should be followed in the preparation of Section 4.

3.7.3.1 **Use of Report of Calibration/Characterization Chart**. The use of Report of Calibration/ Characterization Charts in Section 4 is typically accomplished as follows:

a. When performing tests where the standard utilized has a Report of Calibration, compare the measured TI values to the standards' values in the following fashion: "Verify that the power meter indication is within ±1 dB of the attenuator Report of Calibration value for 10 MHz". Refer the TI measurement/parameter being verified to the standards' value on the Report of Calibration at the appropriate settings for which the TI is being tested (i.e., frequency, power level, voltage, etc.).

b. When utilizing a standard that has a Characterization chart (or cal factor chart), in some cases the Characterization chart values are applied prior to a measurement being performed and sometimes after the measurement. Those corrections applied before the measurements being made require that a message be given that states the correction factor application; e.g., "Set the power meter cal factor switch to the appropriate setting corresponding to the 1 GHz value on the power sensor cal factor chart." Those correction factors that are applied after a measurement is made should also have a message stating that fact; e.g., "Verify that the sum of the power meter indication and the coaxial cable insertion loss, as found on the coaxial cables Characterization chart at 1 GHz, is within ±1 dB of the TI Power Meter indication."

c. The data on a Report of Calibration can and usually is the same data that is found on a Characterization Chart but the Report of Calibration data is usually determined to a higher degree of accuracy for which a NSL is required and can also be for a device which does not normally have a Characterization chart. The Characterization chart data could have been determined by the manufacturer of the device or by a calibration of the device. For example, most power sensors and attenuators come with manufacturers' charts indicating their operating characteristics (i.e., cal factors for the power sensors and attenuation values for the attenuators); while the values on the Characterization charts can be utilized they may not be accurate or at the correct usage requirements in an ICP to be of use for which a Report of Calibration is then required.

3.7.4 **Examples of Section 4**. Figure 9 illustrates completed segments of Section 4 for typical instruments. It should be noted that the examples are provided to illustrate a variety of information that may be required in Section 4. Refer to Appendix A (ICP–000) for style and format purposes.

EXAMPLES OF ICP SECTION 4

Figure

9A Digital Nanovoltmeter (Illustrates use of WARNINGS, tabular data, test configuration, expression of performance limits, etc.).

9B Angle Gage Blocks (Illustrates use of CAUTIONS, NOTES, and special operations applicable to dimensional equipment, and a sample Characterization Chart).

9C B.I.M. Blades Check and Fill Units (Illustrates use of WARNINGS, NOTES, and typical operations for use of automated pressure calibrator of air data calibrator).

9D Scalar Network Analyzers (Illustrates system test configuration, IEEE programmable interface connections, instructions for performing calculations with examples, tabular data, and various NOTES to clarify the calibration process).

9E AC Calibration System (Illustrates use of NOTES and CAUTIONS, alternate method, and Special Calibration label requirement).

Figure 9. Examples of ICP Section 4

This page left intentionally blank.

SECTION 4

CALIBRATION PROCESS

NOTE

Unless otherwise specified, verify the results of each test and take corrective action whenever the test requirement is not met, before proceeding.

4.1 ZERO FUNCTION TEST

4.1.1 Set the DC calibrator to 0 V in standby mode.

4.1.2 Connect the calibrator to the TI as shown in Figure 1.

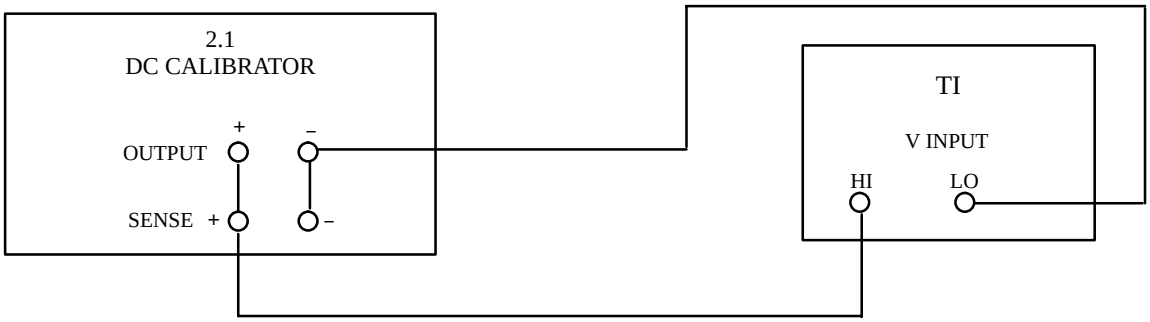

Figure 1. DC Voltage Test Configuration

4.1.3 Set the TI to the 2 V range.

4.1.4 Set the DC calibrator to 0 V and place in operate mode. Record the number on the TI display.

4.1.5 Press the TI ZERO button. Verify that the TI ZERO lamp illuminates and verify that the TI reads 0.00000.

4.1.6 Set the DC calibrator to standby. Now set it so that it will output 1 V.

4.1.7 Set the DC calibrator to operate. A number very close to 1 V will appear on the TI display. Allow several seconds to stabilize. Record this number.

4.1.8 Press the TI ZERO button again. The ZERO lamp will extinguish and the TI display number will change.

4.1.9 Verify that the number in step 4.1.8 is the sum of the two numbers recorded in steps 4.1.4 and 4.1.7. Remember that the number in step 4.1.4 may be negative.

4.1.10 Set the DC calibrator to standby.

Figure 9A. Examples of ICP Section 4 (Digital Nanovoltmeter)

4.4.4 Set the calibrator to each of the following values in standby mode. Then place it in operating mode and verify that the TI indicates within the given tolerance limits.

Calibrator Voltage (V)	TI Tolerance Limits (V)		
0	−0.00002	to	0.00002
4	3.9994	to	4.0006
8	7.9990	to	8.0010
12	11.9986	to	12.0014
16	15.9982	to	16.0018
19	18.9979	to	19.0021
Reverse the polarity of the leads for this value only.			
−19	−18.9979	to	−19.0021

4.4.5 Set the leads so that the TI again indicates positive voltages.

4.4.6 Set the TI range as indicated below. Repeat steps 4.4.2 through 4.4.4 for each of the following ranges. Be sure the calibrator is in standby mode whenever changing TI ranges.

TI Range (V)	Calibrator Voltage (V)	TI Tolerance Limits (V)		
2	1.9	1.89985	to	1.90015
WARNING THESE TESTS ARE AT HAZARDOUS VOLTAGE LEVELS. EXERCISE EXTREME CAUTION.				
200	190	189.979	to	190.021
1000	1000	999.88	to	1000.12

4.4.7 Set the calibrator to standby mode and disconnect the equipment. Reconnect it as shown in Figure 2.

Figure 9A. Examples of ICP Section 4 (Digital Nanovoltmeter) (Continued)

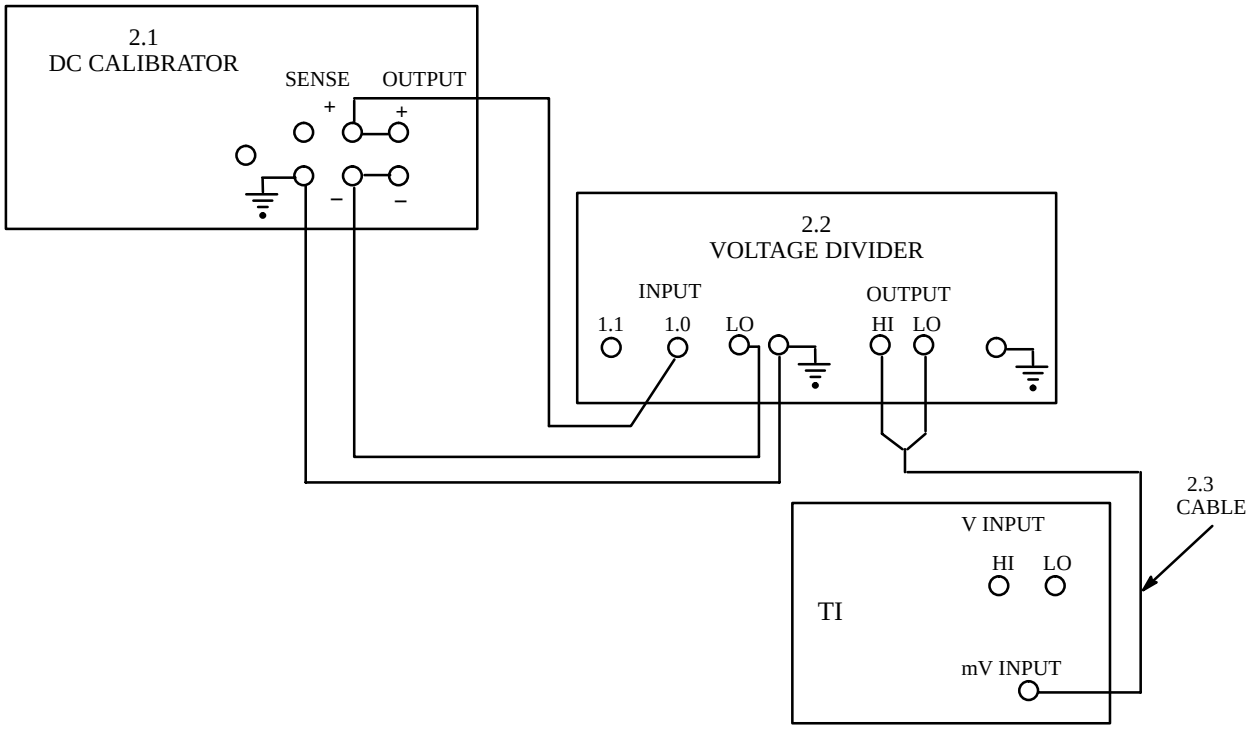

Figure 2. DC Voltage Test Configuration (<2 V)

4.4.8 Set the voltage divider FUNCTION knob to OPR. Repeat steps 4.4.2 through 4.4.4 for each of the following TI ranges, values, and voltage divider settings. Be sure to set the calibrator to standby and rezero the TI whenever the TI range is changed.

TI Range	Divider Setting	Calibrator Voltage (V)	Tolerance Limits (mV)		
2 mV	0.001	0.4	0.39989	to	0.40011
”	“	0.8	0.79983	to	0.80017
”	“	1.2	1.19977	to	1.20023
”	“	1.6	1.59971	to	1.60029
”	“	1.9	1.89967	to	1.90033
20 mV	0.01	0.4	3.9992	to	4.0008
”	“	0.8	7.9986	to	8.0014
”	“	1.2	11.9980	to	12.0020
”	“	1.6	15.9974	to	16.0026
”	“	1.9	18.9970	to	19.0030
200 mV	0.1	0.4	39.992	to	40.008
”	“	0.8	79.986	to	80.014
”	“	1.2	119.980	to	120.020
“	“	1.6	159.974	to	160.026
”	“	1.9	189.970	to	190.030

Figure 9A. Examples of ICP Section 4 (Digital Nanovoltmeter) (Continued)

4.4.9 Set the calibrator to 0 V in standby mode, set the TI to the 20 V range, and disconnect all test equipment from the TI except the calibrator.

4.5 ANALOG OUTPUT TEST

4.5.1 Reconnect the equipment as shown in Figure 1. In addition, connect the DMM (item 2.4) to the TI rear panel ANALOG OUTPUT terminals, observing correct polarity.

4.5.2 The bottom DIP switch on the TI rear panel is the ANALOG OUTPUT button. Adjust this switch to indicate X1.

4.5.3 Set the calibrator to each of the following voltages in operate mode. For each value, verify that the DMM indicates within the given limits.

Calibrator Voltage (V)	DMM Indication (V)		
4	0.3984	to	0.4016
8	0.7978	to	0.8022
12	1.1972	to	1.2028
16	1.5966	to	1.6034
19	1.8962	to	1.9038

4.5.4 Unless other measurements are to be performed, set the calibrator to 0 V in standby mode. Disconnect all equipment from the TI and secure it as necessary.

Figure 9A. Examples of ICP Section 4 (Digital Nanovoltmeter) (Continued)

SECTION 4

CALIBRATION PROCESS

Unless otherwise specified, verify the results of each test and take corrective action whenever the test requirement is not met, before proceeding.

4.1 FLATNESS TESTS

4.1.1 Hold the TI with measuring surface #1 in the horizontal position and place the optical flat carefully on top of the TI.

CAUTION

ENSURE THAT THE OPTICAL FLAT IS HELD FIRMLY; CHIPPING OR OTHER DAMAGE MAY RESULT IF THE FLAT IS ALLOWED TO SLIP.

NOTE

Steel parallels may be used to buttress the TI or hold it in place, as required.

4.1.2 Place the optical flat and the TI beneath the monochromatic light (item 2.5).

4.1.3 Apply a shift pressure while adjusting the optical flat until a fringe pattern or lines are obtained parallel to the TI length.

NOTE

If unable to observe a fringe pattern, the TI may have burrs and/or dust particles on the surface. Deburr and/or clean the appropriate surface, then perform step 4.1.3; repeat the process until satisfactory results are achieved.

4.1.4 Observe the fringe pattern, determine the out–of–flatness condition for the length of the surface, and record the result on the checklist.

NOTE

The out–of–flatness condition of the surface is measured by the optical interference method along lines midway between the edges both across the width and along the length of the surface. A flat surface without errors will indicate several straight lines across the diameter of the optical flat. Any deviation from these straight lines will indicate out of flatness, μ in. Any values less than one fringe is the product of the fractional part multiplied by one fringe (11.6 microinches/fringe).

Figure 9B. Examples of ICP Section 4 (Angle Gage Blocks)

4.2 ANGLE MEASUREMENT TESTS

NOTE

Use nylon gloves to protect clean measuring surfaces and to minimize the transfer of body heat.

4.2.1 Ensure that the equipment has been set up as in configuration A (Figure 1) or Configuration B (Figure 2), as applicable; turn the autocollimator lamps on.

4.2.2 Determine the first TI to be calibrated. Set a standard angle gage block of the same nominal angle in the center of the rotary table if using Configuration A, or in the center of the optical flat for Configuration B.

NOTES

The + end (wide end) of the angle gage block must be placed at the top with respect to Figure 1 or 2. A small strip of tape may be used to mark the exact position of the standard for future reference.

The following convention will apply for the angle test: Autocollimator #1 will face standard measuring surface #1; Autocollimator #2 will face standard measuring surface #2. The two measuring surfaces define the angle of the angle gage block.

4.2.3 Ensure that each autocollimator is level and is set up at the proper height for sighting into the center of the standard angle gage block measuring surface the autocollimator is facing.

4.2.4 Set up each autocollimator for measurements in azimuth. Adjust each autocollimator for a midscale or other convenient indication.

4.2.5 Adjust each autocollimator eyepiece and lamp control to obtain a sharp image with no apparent movement between the measuring reticle lines and the reflected image when the eye is moved from side to side or up and down.

4.2.6 Adjust the micrometer of autocollimator #1 to obtain an exact autocollimator from standard angle gage block measuring surface #1. Note the indication for future reference.

NOTE

Autocollimation is the process whereby the autocollimator is directed toward a plane reflecting surface and the necessary adjustments are made to cause the autocollimator reticle to be precisely aligned with the reticle image reflected from the reflecting surface.

Figure 9B. Examples of ICP Section 4 (Angle Gage Blocks) (Continued)

4.2.18 Verify that the value recorded in column (9), or the TI angle deviation from nominal size, is within the tolerance limits listed.

4.2.19 Perform step 4.2.2 and steps 4.2.6 through 4.2.18 for each remaining TI to be calibrated.

4.2.20 If no other measurements are to be performed, turn the autocollimator lamps off, disconnect and secure the equipment.

4.3 DATA PREPARATIONS

4.3.1 Referring to the sample Characterization Chart, prepare a similar Characterization Chart for the submitting activity.

4.3.2 Use the values from column (9) of the worksheet to report the TI deviations from nominal value.

4.3.3 Report out of flatness values only if they exceed the TI flatness tolerance for length or width.

4.3.4 If necessary, add a statement to the Characterization Chart to indicate that the squareness of the measuring surfaces to the sides was not tested.

Figure 9B. Examples of ICP Section 4 (Angle Gage Blocks) (Continued)

WORKSHEET
ANGLE TEST

(1) Nominal (Angle)	(2) Rdg. 1 (Sec. Arc)	(3) Rdg. 2 (Sec. Arc)	(4) Rdg. 3 (Sec. Arc)	(5) Rdg. 4 (Sec. Arc)	(6) Rdg. 5 (Sec. Arc)	(7) Algebraic Av. Rdg (Sec. Arc)	(8) Standard Deviation (Sec. Arc)	(9) TI Deviation (Sec. Arc)
1 °								
3 °								
5 °								
15 °								
30 °								
45 °								
1’								
3’								
5’								
20’								
30’								
1”								
3”								
5”								
20”								
30”								

Figure 9B. Examples of ICP Section 4 (Angle Gage Blocks) (Continued)

DEPARTMENT OF THE NAVY

Navy Calibration Laboratory
Characterization Chart

FOR
Angle Gage Block Set
Webber Gage Division (STJ)
Model: AG18TR: 116 Ser. No: 8AGTR2

Submitted by
Naval Sea Support Center
Pearl Harbor, Hawaii

The included angles between the contact surfaces of the blocks are as follows:

Nominal Angle	Deviation From Nominal Value	Nominal Angle	Deviation From Nominal Value	Nominal Angle	Deviation From Nominal Value
1°	−0.1”	1’	+0.6”	1”	+0.1”
3°	+0.2”	3’	−0.1”	3”	+1.0”
5°	+0.2”	5’	+0.1”	5”	−0.2”
15°	+0.8”	20’	+0.2”	20”	+0.4”
30°	+0.4”	30’	−0.4”	30”	−0.5”
45°	+0.3”				

Deviations in flatness are reported only when these exceed 4 microinches across the width, 6 microinches along the length, and 10 microinches along the side. The measurements of flatness along the width do not include 1/16 inch of surface nearest the edges; the length measurements do not include 1/4 inch of surface nearest the edges.

The error in squareness of the gaging surfaces perpendicular to the sides of the angle block was not tested.

The estimated maximum uncertainties of these measurements are +1.0 second for angular measurements and +1 microinch for flatness.

The accuracies of the standards utilized by this Laboratory are traceable to standards maintained by the National Institute of Standards and Technology or by the U. S. Navy.

SAMPLE

AMBIENT TEMP_____ PREPARED BY _____
RELATIVE HUMIDITY_____ APPROVED BY _____
REPORT NO. _____ RESUBMISSION DATE _____
DATE _____

Figure 9B. Examples of ICP Section 4 (Angle Gage Blocks) (Continued)

DEPARTMENT OF THE NAVY

Navy Calibration Laboratory
Characterization Chart

FOR

SUBMITTED BY:

AMBIENT TEMP _____

RELATIVE HUMIDITY _____

REPORT NO. _____

DATE _____

PREPARED BY _____

APPROVED BY _____

RESUBMISSION DATE _____

Figure 9B. Examples of ICP Section 4 (Angle Gage Blocks) (Continued)

SECTION 4

CALIBRATION PROCESS

NOTE

Unless otherwise specified, verify the results of each test and take corrective action whenever the test requirement is not met, before proceeding.

4.1 ABSOLUTE PRESSURE GAGE TESTS USING THE ADC

4.1.1 Ensure that the equipment is connected as shown in Figure 1 and that paragraphs 3.8 and 3.10 have been performed.

4.1.2 Respond to the ADC “SELECT SYSTEM MODE” scenario as follows:

4.1.2.1 Touch PT CONTROL.

4.1.2.2 Touch ADVANCE.

NOTE

The “GAUGE TEST’ scenario is not used in this procedure because calibration points first in the direction of decreasing, then increasing absolute pressure cannot be readily programmed in the scenario.

4.1.3 To calibrate the 0–29.9 in Hg abs scale, respond to the first ADC “PT CONTROL” scenario as follows:

4.1.3.1 Touch ABSOLUTE.

4.1.3.2 Touch AUTOMATIC CONTROL.

NOTE

Manual control is not used in this procedure because it requires the operation of the ferenstat, which is much slower than using automatic control.

4.1.3.3 Touch ENTER FULLSCALE VALUE, then touch 2, 9, . , 9 and PSI to obtain IN HG units, then touch ENTER below.

4.1.3.4 Touch ADVANCE. Wait for “SYSTEM VENTING” display to extinguish.

4.1.4 Set the vacuum pump power switch to on.

Figure 9C. Examples of ICP Section 4 (B.I.M. Blades Check and Fill Units)

NOTE

Throughout this procedure, follow APC display instructions. The word “ENTER” on the display signifies that the next operator action will include touching ENTER. A wrong entry can be corrected by touching CLR and keying the correct data before touching ENTER. After ENTER is touched, make corrections by touching BACKSTEP, then CLR and keying the correct data. To terminate the test, depress ABORT to vent the system pressure and return the program to the starting condition.

4.2.2 To calibrate the 0 to 29.9 in Hg abs scale, respond to the APC display messages as follows:

MESSAGE	RESPONSE
INSTALL LIQUID TRAP AT TEST PORT PUSH ADV	Touch ADV
PRINTER DESIRED? 1 = YES, 2 = NO	Key in 2
1 = GAUGE OR TRANSDUCER, 2 = SWITCH	Key in 1
1 = PRESS, 2 = VAC, 3 = ABS, 4 = COMP	Key in 3
1 = GAS, 2 = LIQUID	Key in 1
CONNECT GAUGE, PUSH ADV	Touch ADV (already connected)
ENTER FULLSCALE VALUE:	Key in 30, then touch ENTER
UNITS PSI YES = ADV, NO = CLR	Touch CLR to obtain IN HG units, then touch ADV
ENTER TOLERANCE %:	Key in artificial tolerance of 1, touch ENTER
TEST POINTS 1 = AUTOMATIC, 2 = MANUAL ENTRY	Key in 1
DOWN SCALE TEST DESIRED? 1 = YES, 2 = NO	Key in 1
1 = NORMAL CAL, 2 = RESTRICTED – CAL LAB ONLY	Key in 1
CONNECT VACUUM PUMP. PUSH ADV	(See below)

4.2.3 Connect a vacuum pump and low pressure hose to the APC control unit VACUUM port. Set the pump power switch to on.

NOTES

If the pump is the King Nutronics 3666–154–1, set the three–way pump selector valve to ON at this time.

The APC programming cannot accept calibration points first in the direction of decreasing, then increasing absolute pressure when using automatic control. Each calibration point has to be programmed separately.

Figure 9C. Examples of ICP Section 4 (B.I.M. Blades Check and Fill Units) (Continued)

4.2.4 Touch ADV on the APC keyboard. In response to the display message “FIRST POINT 8 IN HG PUSH ADV”, touch ADV to generate the required absolute pressure.

4.2.5 In response to the message “MANUAL SET 8 IN HG ACTUAL XXXX”, touch ADV and MEAS and use the APC ferenstat (INCREASE–DECREASE control) to obtain a stable TI (red scale) indication equal to the first calibration point in column (3) on the checklist. The final indication should be approached in the direction of increasing absolute pressure.

4.2.6 Touch MEAS on the APC keyboard. Verify that the APC indicates that the gage is within the tolerance limits on the calibration checklist.

4.2.7 Perform steps 4.2.4 through 4.2.6, as applicable, at each remaining increasing–pressure calibration point on the checklist.

NOTE

The final increasing–vacuum point, 5.0 in Hg absolute, can be readily obtained by using the APC ferenstat, approaching the final TI gage indication in the direction of increasing absolute pressure.

4.2.8 Perform steps 4.2.4 through 4.2.6 at each decreasing–vacuum calibration point on the checklist, except approach the final TI gage indication in the direction of decreasing absolute pressure.

4.2.9 In response to the message “DISCONNECT VACUUM PUMP” set the pump power switch to off and disconnect the pump low pressure from the APC control unit.

4.2.10 Depress ABORT on the APC panel to reduce system pressure to zero.

4.2.11 Disconnect the pressure line from the TI TO B.I.M. NIPPLE port (see Figure 2) and connect it to the TI NITROGEN SUPPLY port.

4.2.12 Set the TI PRESSURE REGULATOR fully ccw (closed).

4.2.13 To calibrate the 0 to 20 psig (14.7 to 34.7 psia) black scale of the TI absolute pressure gage, perform step 4.2.2, except key in 20 psig (34.7 psia) as the fullscale value.

4.2.14 Perform steps 4.2.4 through 4.2.10, except operating at gage pressure instead of absolute pressure.

4.2.15 If no other measurements are to be performed, set the APC POWER switches to off, disconnect and secure the equipment. If the TI is the S1670–15000–25, proceed directly to section 4.3.

WARNING

SECTIONS 4.3 AND 4.4 OF THIS PROCEDURE INVOLVE PRESSURES THAT ARE HAZARDOUS TO PERSONNEL. USE ONLY APPROVED PRESSURE HOSES AND FITTINGS.

Figure 9C. Examples of ICP Section 4 (B.I.M. Blades Check and Fill Units) (Continued)

4.3 NITROGEN REGULATED PRESSURE GAGE TEST

4.3.1 Disconnect the nitrogen regulated pressure gage from the TI pressure system, note the range of the gage (0 to 60 psig or 0 to 200 psig).

4.3.2 If the APC was used to calibrate the TI absolute pressure gage, reconnect the equipment as shown in Figure 3. If the APC was prepared for use (paragraph 3.9), but not selected for the absolute pressure gage calibration, connect the equipment as shown in Figure 3.

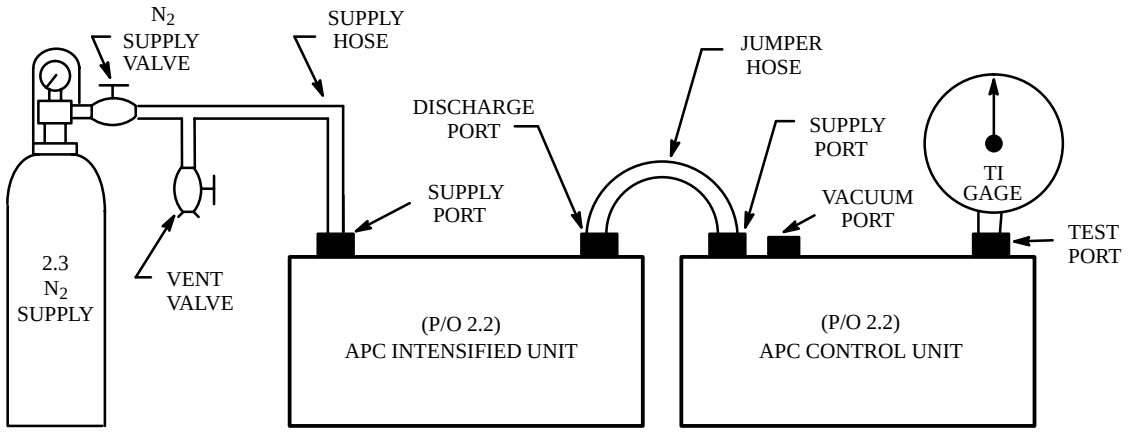

Figure 3. Pressure Gage Test Configuration Using the APC

4.3.3 Respond to the APC display messages as follows:

MESSAGE	RESPONSE
INSTALL LIQUID TRAP AT TEST PORT PUSH ADV	Touch ADV
PRINTER DESIRED? 1 = YES, 2 = NO	Key in 2
1 = GAUGE OR TRANSDUCER, 2 = SWITCH	Key in 1
1 = PRESS, 2 = VAC, 3 = ABS, 4 = COMP	Key in 1
1 = GAS, 2 = LIQUID	Key in 1
CONNECT GAUGE. PUSH ADV	Touch ADV (already connected),
ENTER FULLSCALE VALUE:	key in 60 or 200, as applicable to the TI gage, then touch ENTER
UNITS PSI YES = ADV, NO = CLR	Touch ADV
ENTER TOLERANCE %:	Key in 2, then touch ENTER
TEST POINTS 1 = AUTOMATIC, 2 = MANUAL ENTRY	Key in 1
DOWN SCALE TEST DESIRED? 1 = YES, 2 = NO	Key in 1
1 = NORMAL CAL, 2 = RESTRICTED – CAL LAB ONLY	Key in 1
FIRST POINT 15 (or 50) PSI PUSH ADV	Touch ADV
MANUAL SET 15 (or 50) PSI ACTUAL XXXXX	(See below)

Figure 9C. Examples of ICP Section 4 (B.I.M. Blades Check and Fill Units) (Continued)

SECTION 4

CALIBRATION PROCESS

NOTES

Unless otherwise specified, verify the results of each test and take corrective action whenever the test requirement is not met, before proceeding.

Use the appropriate checklist corresponding to the detector with the TI in the calibration process.

4.1 DYNAMIC RANGE TESTS

NOTE

If more than one detector was supplied with the TI, perform steps 4.1.1 through 4.1.15 for one detector, and then steps 4.1.16 through 4.1.16.3 for any additional detectors.

4.1.1 Connect the equipment as shown in Figure 1.

4.1.2 Set the sweep oscillator for a 50 MHz (33 GHz if the detector used is the H–P 11664D; if the H–P 8350 series is used for the sweep oscillator, set the frequency to 16.5 GHz, then press SHIFT, START, and enter 2 MHz on the 8350 to read out 33 GHz.) CW minimum amplitude output. If the H–P 8350 series mainframe and appropriate plug–in is being used for the sweep oscillator, ensure that the H–P 8350 series mainframe internal square wave modulation is turned off, if applicable, and select the EXT ALC MODE. If the H–P 8340 series is being used for the sweep oscillator, ensure that the H–P 8340 series external pulse modulation is turned on, if applicable, and select the LEVELING METER mode. Set the sweep oscillator sweep time to 150 ms, and ensure that the RF output is turned off.

4.1.3 Press the TI FUNCTION – AVG pushbutton, and then press the AVG ON OFF CRT pushbutton to set the averaging to ON (ON is highlighted), if necessary. Ensure that the default Averaging Factor of “8” is displayed on the TI CRT.

4.1.4 Press the TI FUNCTION – CURSOR pushbutton, and ensure that a cursor appears at the center of the trace.

4.1.5 Turn on the sweep oscillator RF output, and adjust the RF output level of the sweep oscillator for an increase in power, and verify that a TI CRT CRSR (Cursor Value) indication of +16 dBm (+8 dBm if the detector used is the H–P 11664D) or greater can be obtained.

Figure 9D. Examples of ICP Section 4 (Scalar Network Analyzers)

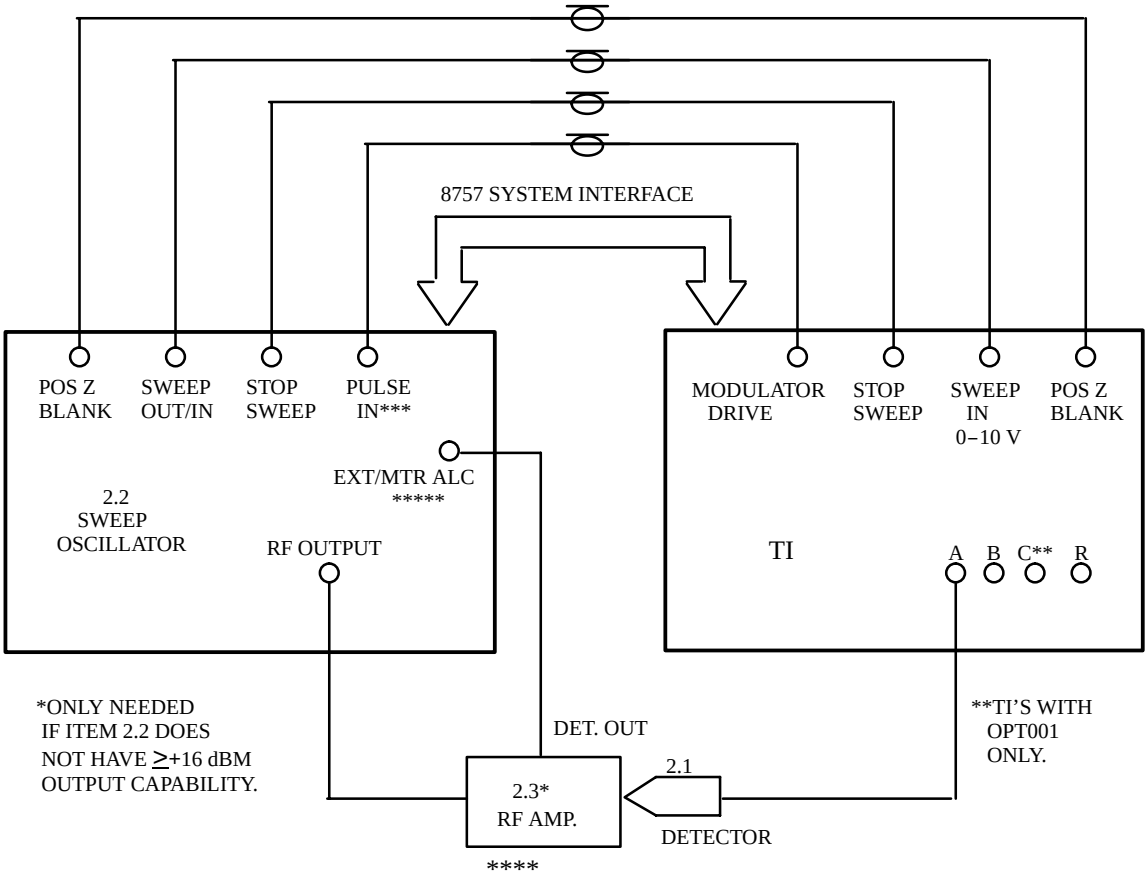

*** Located on rear of 83592B plug in or on front panel of 8340 series, (MODULATOR INPUT–PULSE) as applicable.
**** Use the 8349B with the 83554A if the detector used is the H–P 11664D.
***** Located on front panel of 83592B plug in. If the 8340 series is used, connect to the LEVELING EXT INPUT.

Figure 1. Dynamic Range Test Configuration

4.1.6 Set the sweep oscillator RF output power level to minimum.

4.1.7 Disconnect the detector from the sweep oscillator (or RF amplifier) output, and allow the trace to settle.

4.1.8 Verify that a TI CRT Cursor Value indication is –60 dBm or lower (–55 dBm or lower, if the TI is being calibrated with a H–P 85025 series detector; –50 dBm or lower, if the detector used is the H–P 11664D).

4.1.9 Disconnect the detector cable from the TI A input, and reconnect it to the B input. Reconnect the detector to the sweep oscillator (or RF amplifier) output.

Figure 9D. Examples of ICP Section 4 (Scalar Network Analyzers) (Continued)

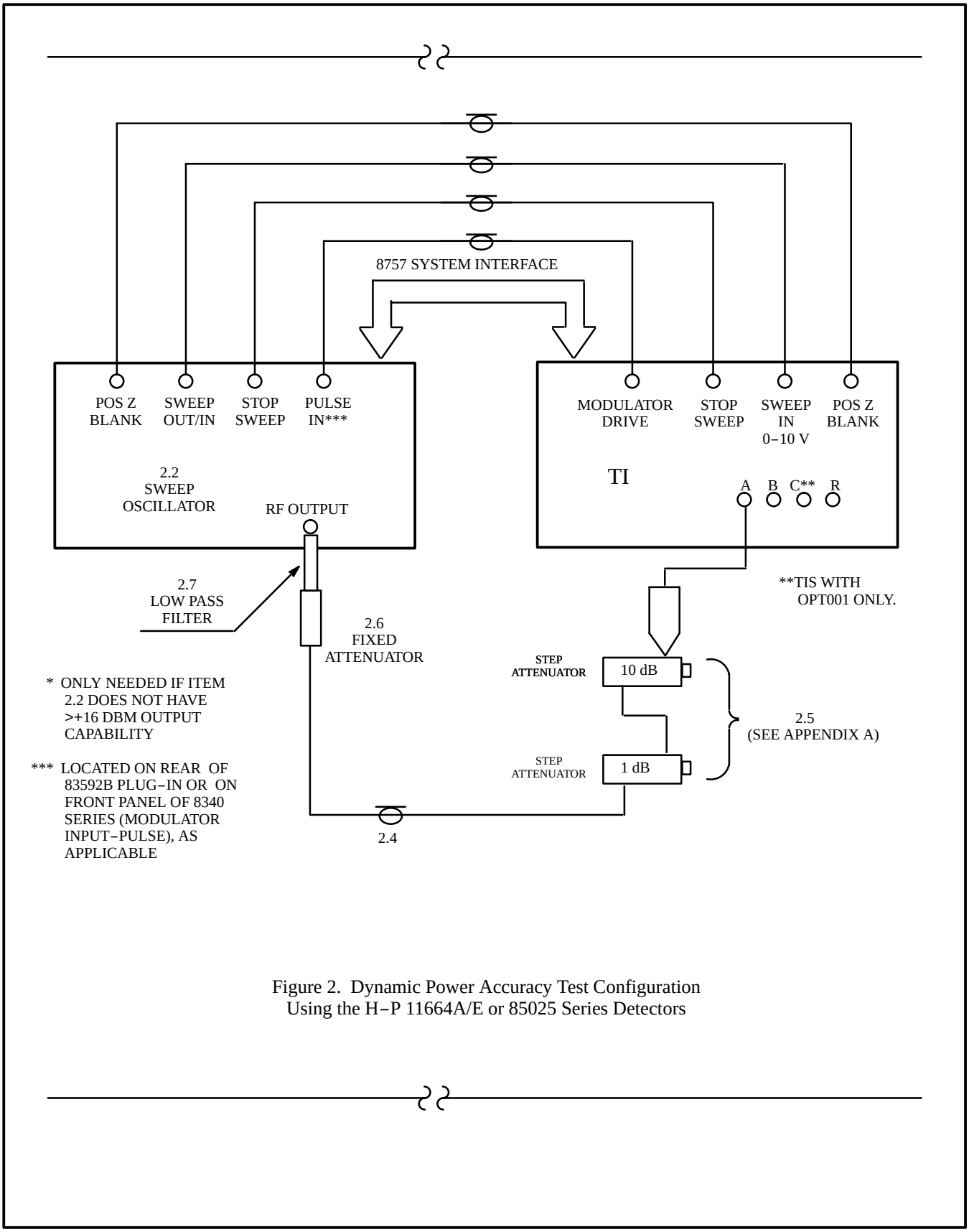

Figure 2. Dynamic Power Accuracy Test Configuration
Using the H–P 11664A/E or 85025 Series Detectors

Figure 9D. Examples of ICP Section 4 (Scalar Network Analyzers) (Continued)

(For the H–P 11664A/E or 85025 Series Detectors):

CPL = +10 dBm – D/C

where D/C = Value for step attenuator settings from Report of Calibration (See Appendix A)

Example:

Assume: (a) –6 dBm Nominal Power Level (which implies requirement of 16 dB of attenuation using 1 and 10 dB step attenuators), and
(b) Calibration value for D/C at 16 dB setting is 15.88 dB

Then: CPL = +10 dBm – 15.88 dB
= –5.88 dBm @ –6 dBm Nominal Power Level

Nominal Power Level (dBm)	Nominal 10 dB Step Attenuator Setting (dB)	Nominal 1 dB Step Attenuator Setting (dB)	Dynamic Accuracy Error (dB)[3]	Dynamic Accuracy Error (dB)[4]	Dynamic Accuracy Error (dB)[5]
+10	0	0	±0.20	±0.575	±0.60
+6 [1]	0	4	±0.16	————	————
+3 [1]	0	7	±0.13	————	————
–3 [1]	10	3	±0.13	————	————
–6 [1]	10	6	±0.16	————	————
–10	20	0	±0.20	±0.40	±0.40
–13 [1]	20	3	±0.23	————	————
–16 [1]	20	6	±0.26	————	————
–20	30	0	±0.30	±0.40	±0.40
–25	30	5	±0.30	±0.40	±0.40
–30	40	0	±0.30	±0.40	±0.40
–35	40	5	±0.30	±0.40	±0.40
–40 (16)[2]	50	0	±0.30	±0.70	±0.70
–45 (32)[2]	50	5	±0.35	±1.00	±1.00
–50 (64)[2]	60	0	±0.40	±1.30	±1.30
–55 (64)[2]	60	5	±0.80	±1.60	±1.60
The following test condition is only for TIs being calibrated with H–P 11664A/E series detectors.					
–60 (64)[2]	70	0	±1.20	————	————

[1] These test conditions are only for TIs being calibrated with H–P 11664A/E series detectors.
[2] Value in parenthesis are TI Averaging Factors. See the note preceding step 4.2.8.
[3] Applicable for TIs being calibrated with H–P 11664A/E series detectors only.
[4] Applicable for TIs being calibrated with H–P 85025A/B series detectors only.
[5] Applicable for TIs being calibrated with H–P 85025D/E series detectors only.

Figure 9D. Examples of ICP Section 4 (Scalar Network Analyzers) (Continued)

4.2.7 Adjust the sweep oscillator power output level to set the TI CRT Cursor Value to 0.0 dBm [+10 dBm (or +8 dBm for the H–P 11664D) minus 10 dB (or 8 dB for the H–P 11664D) step calibrated attenuation, obtained from the step attenuator's Report of Calibration, See Appendix A]. Record the result as the Cursor Value reference indication, and do not change the setting of the sweep oscillator output level for the remainder of the procedure for this TI input and detector.

NOTE

For Nominal Power Levels of –40 through –60 dBm, use the TI Averaging Factors shown in the previous chart (following step 4.2.3) in parenthesis to reduce trace noise, as applicable. Set the Averaging Factors to the given values as follows:

(1) Set the step attenuator(s) to the specified setting.
(2) Press the TI FUNCTION – AVG pushbutton to on, the AVG FACTOR CRT pushbutton to on, and the ENTRY–STEP pushbuttons as necessary for the required Averaging Factor.
(3) Ensure the TI AVG ON OFF CRT pushbutton is set to ON.
(4) Proceed as in step 4.2.8. Press the TI AVG ON OFF CRT pushbutton to OFF before resetting the step attenuator(s) for the next Nominal Power Level.

4.2.8 Calculate the Dynamic Accuracy Error (DAE) for each of the Nominal Power Levels from the previous chart (following step 4.2.3) by setting the step attenuators to each of the corresponding settings listed in the chart following step 4.2.3 to obtain the Cursor Value (CV) and then using the following formula:

DAE = CV – CPL (algebraic subtraction)

Where: CV = Cursor Value displayed on the TI CRT for each pair of step attenuator settings
CPL = Calibrated Power Level (step 4.2.3)

NOTE

Include all signs in this calculation.

Example:

Assume: Value displayed for CV @ +10 dBm Nominal Power Level = +9.98 dBm
Value recorded for CPL @ +10 dBm Nominal Power Level = +9.92 dBm

Then: DAE = (+9.98 dBm) – (+9.92 dBm) = +0.06 dB

Figure 9D. Examples of ICP Section 4 (Scalar Network Analyzers) (Continued)

NOTE

If an oscilloscope vertical amplifier with a 50 ohm input impedance is used, the 50 ohm feedthrough termination is not necessary.

4.3.1.3 Press the TI INSTRUMENT STATE–PRESET pushbutton.

4.3.1.4 Verify that both the positive and negative portions of the square wave are equal to or greater than 2.2 V in amplitude, referenced to the center horizontal graticule line of the oscilloscope.

4.3.1.5 Disconnect the oscilloscope from the TI.

4.3.2 Frequency Accuracy and Symmetry Test

4.3.2.1 Adjust the electronic counter Channel A and Channel B trigger levels to 0.0 Volts, set the input mode to common A, and set the input impedance to 50Ω.

4.3.2.2 Connect the TI MODULATOR DRIVE output, rear panel, to the electronic counter Channel A input using a coaxial cable.

4.3.2.3 Measure the modulation frequency, and verify an indication on the electronic counter of between 27.766 to 27.790 kHz.

4.3.2.4 Set the electronic counter for time interval measurements.

4.3.2.5 Set the electronic counter Channel A to trigger on the rising edge of the waveform, Channel B to trigger on the falling edge of the waveform, and then verify an electronic counter indication of 17.65 to 18.35 μs.

4.3.2.6 Set the electronic counter Channel A to trigger on the falling edge of the waveform, Channel B to trigger on the rising edge of the waveform, and then verify an electronic counter indication of 17.65 to 18.35 μs.

4.3.2.7 Unless other measurements are to be performed, turn all power switches to off or standby, and disconnect the test equipment from the TI.

4.4 Special Calibration Label

4.4.1 Affix a “SPECIAL CALIBRATION” label to the TI stating that the TI is only to be used with the detectors(s) with which it was calibrated, and list the appropriate model and serial numbers of the detector(s).

Figure 9D. Examples of ICP Section 4 (Scalar Network Analyzers) (Continued)

SECTION 4

CALIBRATION PROCESS

NOTE

Unless otherwise specified, verify the results of each test and take corrective action whenever the test requirement is not met, before proceeding.

4.1 FREQUENCY TESTS

4.1.1 Connect the TI COUNTER OUTPUT (located on the rear of the TI) to electronic counter (item 2.2) input connector.

4.1.2 Set the TI FREQUENCY RANGE switch and the FREQUENCY selection switches to each of the following settings at the line voltage indicated. At each setting, verify that the electronic counter indication is within the tolerances listed.

Line Voltage	FREQUENCY Range Switch	FREQUENCY Selection Switches	Tolerance Limits
105 V	100 Hz	10.00 Hz	98.0 to 102.0 ms
”	”	100.00 ”	9.89 to 10.11 ”
115 V	1 kHz	0.1111 kHz	8.83 to 9.18 ”
”	”	0.2222 ”	4.43 to 4.57 ”
”	”	0.3333 ”	2.96 to 3.04 ”
”	”	0.4444 ”	439.0 to 449.8 Hz
”	”	0.5555 ”	548.9 to 562.1 ”
”	”	0.6666 ”	658.9 to 674.3 ”
”	”	0.7777 ”	768.9 to 786.5 ”
”	”	0.8888 ”	878.9 to 898.7 ”
”	”	0.9999 ”	988.9 to 1010.9 ”
”	”	1.1111 ”	1099.0 to 1123.2 ”
125 V	10 kHz	5.000 ”	4940 to 5060 ”
”	”	10.000 ”	9890 to 10,110 ”
”	100 kHz	50.00 ”	49,400 to 50,600 ”
”	”	100.00 ”	98,900 to 101,100 ”
*”	1 MHz	1.0000 MHz	967,000 to 1,033,000 ”

*This test does not apply for the 5200A/5205A system.

4.1.3 Disconnect the electronic counter from the TI.

4.1.4 Adjust the autotransformer output voltage to 115 V.

Figure 9E. Examples of ICP Section 4 (AC Calibrator System)

TI & DMS		DMS Filters		
Voltage	Frequency	400 Hz	80 kHz	Tolerance Limits
1 V	50 kHz*	ON	OFF	0.041% or less
10 V	”	”	”	0.040% ”
100 V	”	”	”	0.040% ”
100 V	100 kHz*	”	”	0.140% ”
10 V	”	”	”	0.141% ”
1 V	”	”	”	0.141% ”
100 mV	”	”	”	0.150% ”
300 V**	”	”	”	0.200% ”
300 V**	50 kHz	”	”	0.090% ”
300 V**	10 kHz	”	”	0.050% ”
300 V**	25 Hz	OFF	ON	0.050% ”

* Tolerance limit includes residual distortion of DMS, item 2.3.
** High–voltage output; TI VOLTAGE RANGE is set to 1000 V.

4.2.3.3 Set the TI MODE selector to OPER, and depress the DMS DISTORTION pushbutton.

4.2.3.4 If the DMS frequency mode of operation is unstable, fine tune the equipment frequency–controls setting, more or less than the listed frequency value, by resetting the DMS (and/or the TI) frequency controls as required until both of the DMS NOTCH–FREQUENCY LOW–HIGH indicators are off.

NOTE

The operation of the DMS frequency pushbutton may not always cause the internal DMS oscillator to go through its automatic stabilization cycle. If the oscillator appears unstable, momentarily set the FAST RESPONSE/LOW DISTORTION switch to the FAST RESPONSE position and then return it immediately to the LOW DISTORTION position.

4.2.3.5 Set the DMS pushbutton FILTERS to the settings indicated.

4.2.3.6 Set the DMS RATIO selector switch progressively to a lower PERCENT range, setting the DMS SIGNAL–COMMON selector to either FLOAT or as required for the lowest % meter indication.

4.2.3.7 Verify that the DMS % indication is within the tolerance limits listed.

4.2.3.8 As a preparation for the next measurement, set the TI MODE selector to STDBY position. If using the 1700B, set the DMS selector to the 100 percent position and depress the DMS VOLTS POWER pushbutton.

4.2.4 Unless other measurements are to be performed, disconnect the test configuration.

4.3 HARMONIC DISTORTION AND NOISE: ALTERNATE METHOD

4.3.1 Connect the equipment except the notch filter as shown in Figure 2.

Figure 9E. Examples of ICP Section 4 (AC Calibrator System) (Continued)

NOTE

Subsection 4.3 is applicable only if the DMS (item 2.3) is not available. When the DMS is available, perform distortion measurements as described in subsection 4.2.

4.3.2 Set the TI controls as follows:

FREQUENCY RANGE switch to	100 Hz
FREQUENCY switch to	100 Hz
VOLTAGE RANGE switch to	1 V
VOLTAGE setting to	0.300000
MODE switch to	OPER

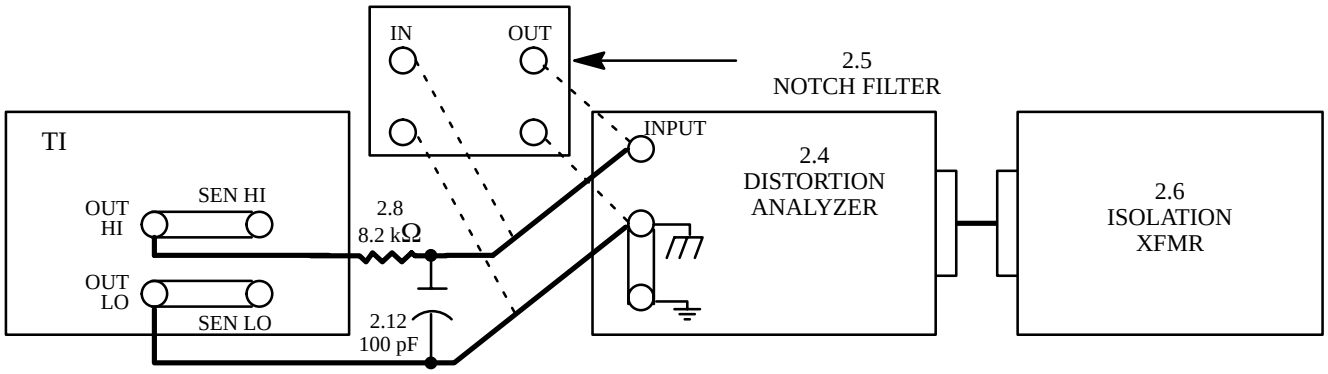

Figure 2. Alternate Distortion Test Configuration

4.3.3 Set the controls of the distortion analyzer to obtain a reference set level of 100% meter indication.

4.3.4 Set the frequency output of the distortion analyzer to indicate 100 Hz initially. Set the distortion analyzer to measure distortion.

4.3.5 Tune the controls of the distortion analyzer, such as the frequency and the balance controls, for the lowest meter indication.

4.3.6 Adjust the controls of the distortion analyzer to progressively more sensitive ranges, while tuning the controls to obtain a minimum % indication. Verify that the indicated distortion is 0.07% or less.

4.3.7 Set the % distortion range switch to 100%.

4.3.8 Set the functional selector switch of the distortion analyzer to the voltmeter position.

4.3.9 Set the TI MODE switch to STANDBY, and disconnect the distortion analyzer from the TI.

Figure 9E. Examples of ICP Section 4 (AC Calibrator System) (Continued)

4.4.8 Continue calibration in accordance with the following table: Operation (a) means null the differential voltmeter and note the indication for reference. Operation (b) means readjust differential voltmeter to re–establish the reference null, and verify that the reference null is re–established within the tolerance limits listed.

TI					
Freq. Output	Voltage Range (V)	Voltage Output (V)	Load	Operation	Tolerance Limits
30 Hz	100	100	None	(a)	Ref
”	”	”	2 kΩ	(b)	±5 mV or less
20 kHz	10	10	None	(a)	Ref
”	”	”	200Ω	(b)	±600 µV or less
*”	1000	500	None	(a)	Ref
”	”	”	10 kΩ	(b)	±50 mV or less

*Connect the 5205A to the 5200A for this test.

4.4.9 Set the TI MODE switch to STDBY.

4.5 ERROR MEASUREMENT TESTS

4.5.1 Connect the equipment as shown in Figure 4.

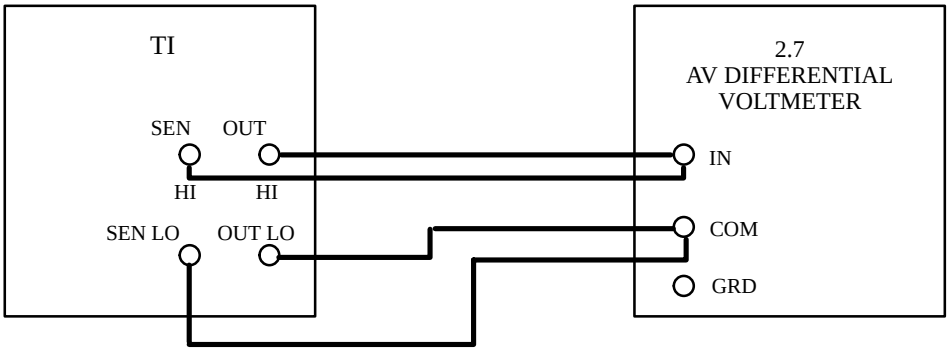

Figure 4. Error Measurement Test Configuration

4.5.2 Set the TI controls as follows:

VOLTAGE RANGE switch to	10 V
VOLTAGE selection switch to	10.00000
FREQUENCY RANGE switch to	1 kHz

Figure 9E. Examples of ICP Section 4 (AC Calibrator System) (Continued)

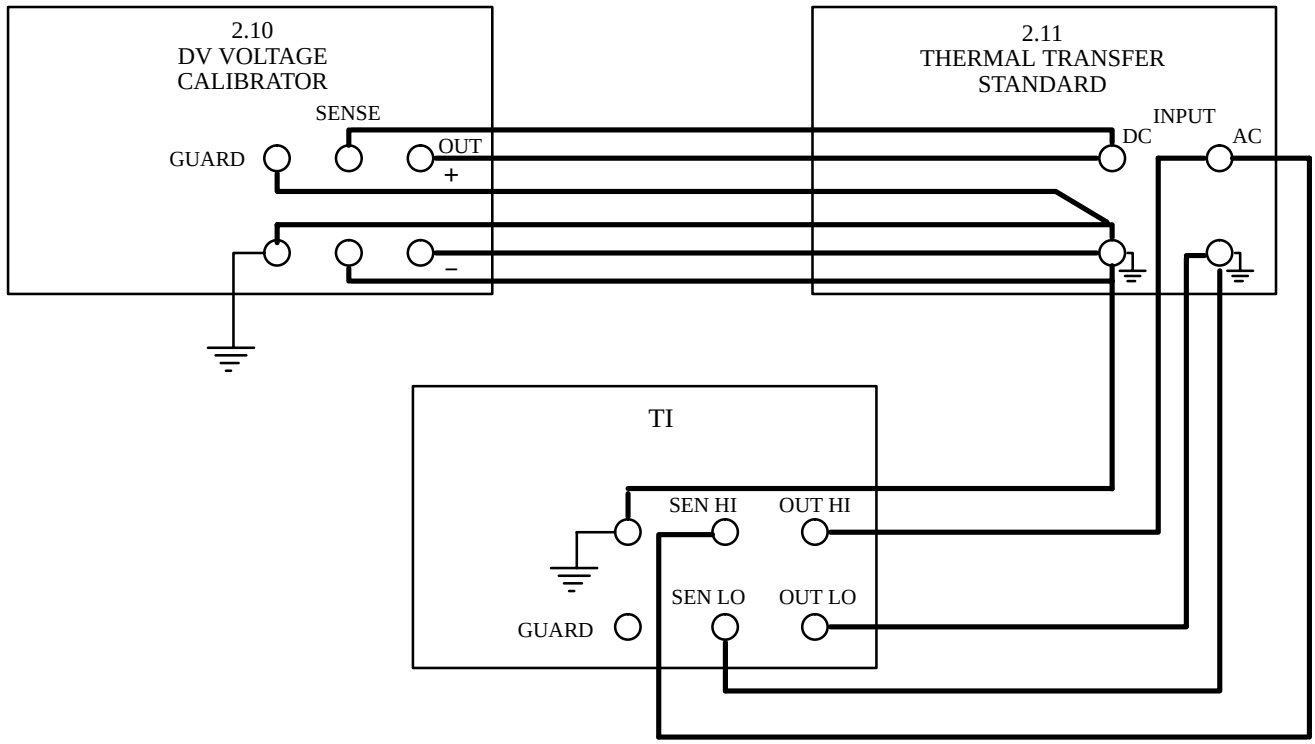

Figure 6. Voltage Output Test Configuration (using 540B)

4.7.1.5 Set the TTS galv switch to open and the sensitivity switch to low.

4.7.1.6 Set the TTS mode switch to AC search, selecting the correct range switch setting so that the percent input meter indicates in the green area, then switch the mode switch to the AC transfer position.

4.7.1.7 Vary the TI ± VERNIER control as required to re–establish the galvanometer null indication. (Do not adjust the TTS reference controls while in the AC MODE).

4.7.1.8 Obtain a null indication successively in the “medium” and “high” positions of the TTS Sensitivity switch by adjusting the ± VERNIER control on the TI.

4.7.1.9 Allow 15 to 30 seconds for the galvanometer to stabilize. Verify that the VERNIER – Voltage error indication is ±0.105% or less.

4.7.1.10 Repeat steps 4.7.1.4 through 4.7.1.9 at each of the following frequencies. Use the TI ± VERNIER control to obtain a null indication on the TTS galvanometer in the AC TRANSFER MODE. At each setting, verify that the VERNIER – Voltage error indication is within the tolerances listed.

Figure 9E. Examples of ICP Section 4 (AC Calibrator System) (Continued)

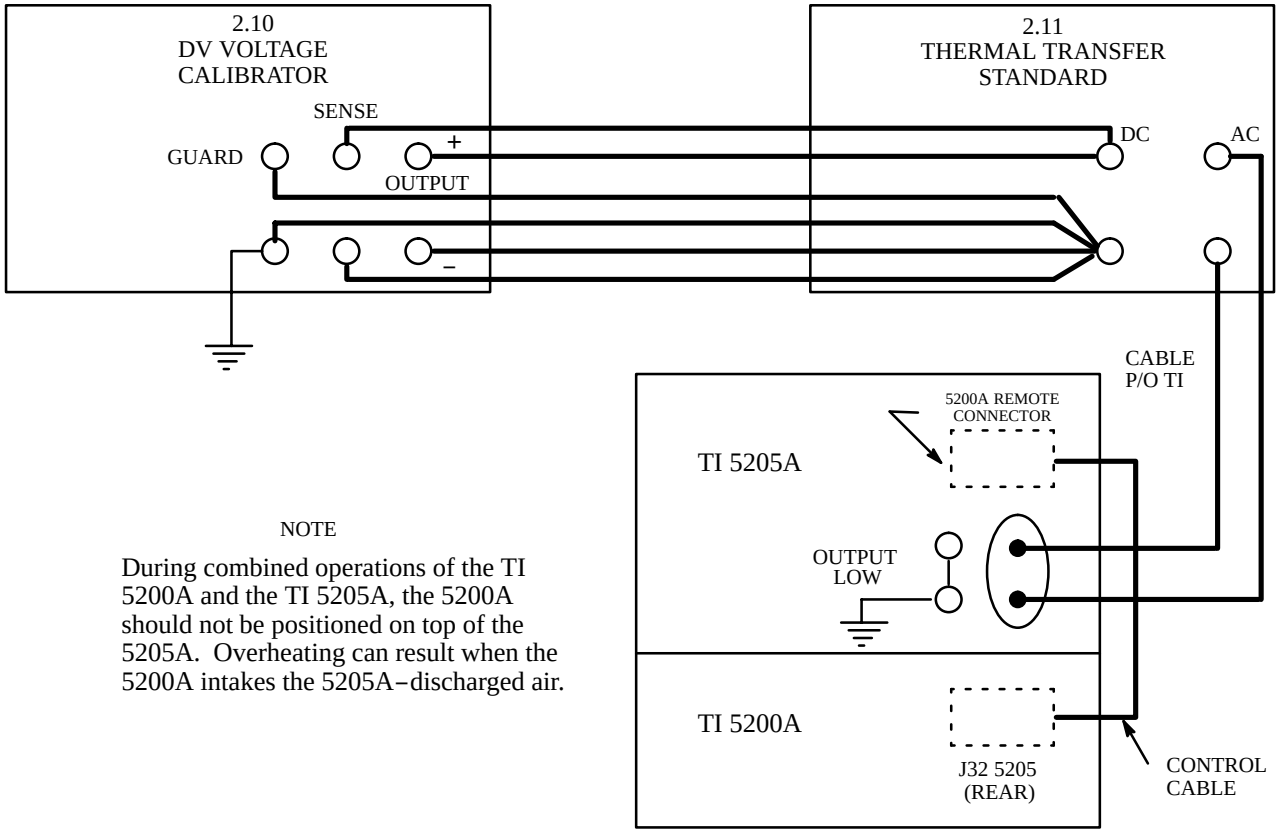

NOTE

During combined operations of the TI 5200A and the TI 5205A, the 5200A should not be positioned on top of the 5205A. Overheating can result when the 5200A intakes the 5205A–discharged air.

Figure 7. 1000 V Range Constant–Gain Test Configuration (using 540B)

CAUTION

WHEN TESTING THE 1000 V RANGE, DO NOT CONNECT OR DISCONNECT TEST LEADS TO THE TI HIGH VOLTAGE CABLE UNTIL THE OUTPUT IS DISABLED BY SETTING THE TI MODE SWITCHES TO STDBY. WHEN CONNECTING OR DISCONNECTING THE DV VOLTAGE CALIBRATOR, SET ITS POWER SWITCH TO “STANDBY”.

CAUTION

THE OUTPUT–LOW TERMINAL OF THE 5205A SHOULD NEVER BE LEFT FLOATING DURING OPERATION. IF THE STRAP BETWEEN THE OUTPUT–LOW AND CHASSIS–GROUND TERMINAL IS NOT PRESENT, INSURE THAT A CONNECTION TO CHASSIS–GROUND IS PRESENT THROUGH THE OUTPUT CABLE AND THE LOAD.

Figure 9E. Examples of ICP Section 4 (AC Calibrator System) (Continued)

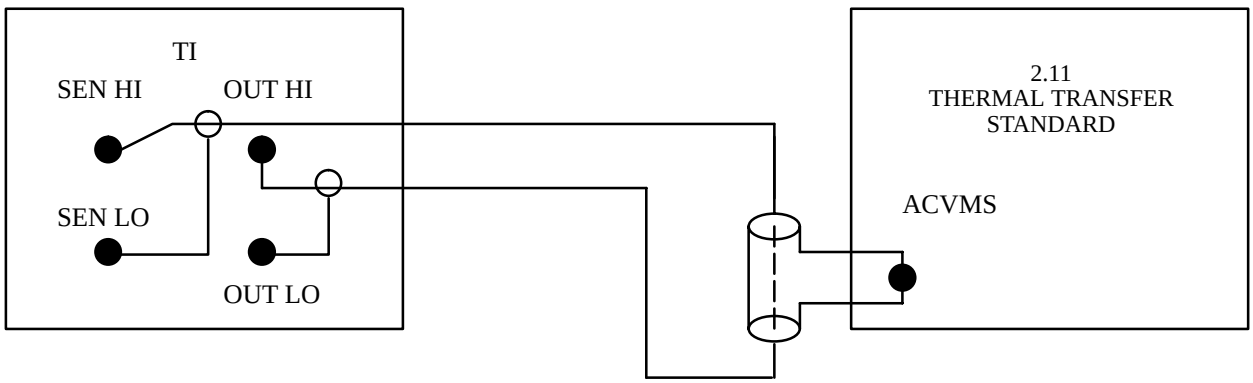

Figure 8. Voltage Output Test Configuration (using 4920M)

4.8.2.2 Repeat steps 4.8.1.3 through 4.8.1.4 setting up the equipment as listed as follows, and verify that the TI is within the tolerance limits listed.

ACVMS RANGE (V)	ACVMS RESOL.	ACVMS RANGE (V)	TI FREQ.	TI NOMINAL OUTPUT VOLTAGE (V)	TOLERANCE LIMITS (V)
10	Res 6	10	20 Hz	10.00000	9.9895 to 10.0105
10	Res 6	10	50 Hz	10.00000	9.9978 to 10.0022
10**	Res 6	10	100 Hz	10.00000	9.9978 to 10.0022
10	Res 6	10	1 kHz	10.00000	9.9978 to 10.0022
10	Res 6	10	20 kHz	10.00000	9.9945 to 10.0055
10	Res 6	10	50 kHz	10.00000	9.9945 to 10.0055
10	Res 6	10	100 kHz	10.00000	9.9640 to 10.0360
10	Res 6	10	1 MHz*	10.00000	9.9640 to 10.0360

* This test does not apply for the 5200A/5205A system
** Set the filter to 100 Hz.

4.8.3 100 V Range Accuracy Tests

4.8.3.1 Set the TI controls as follows:

VOLTAGE RANGE switch to	100 V
VOLTAGE switch to	100.00000

Figure 9E. Examples of ICP Section 4 (AC Calibrator System) (Continued)

4.8.4.5 Set the equipment controls for minimum output.

4.8.4.6 Set the TI controls to obtain the setting indicated for the measurements below.

4.8.4.7 Repeat step 4.8.4.4 at each of the following TI frequencies:

TI NOMINAL OUTPUT VOLTAGE (V)	TI FREQ.	TOLERANCE LIMITS (V)
350 V	30 Hz	349.8400 to 350.1600
350 V	50 kHz	349.6700 to 350.3300
300 V	100 kHz	299.6000 to 300.4000
200 V	50 kHz	199.7900 to 200.2100
200 V	400 Hz	199.9000 to 200.1000

4.8.4.5 Set the equipment controls for minimum output.

4.8.4.6 Set the TI controls to obtain the setting indicated for the measurements below.

4.8.4.7 Repeat step 4.8.4.4 at each of the following TI frequencies:

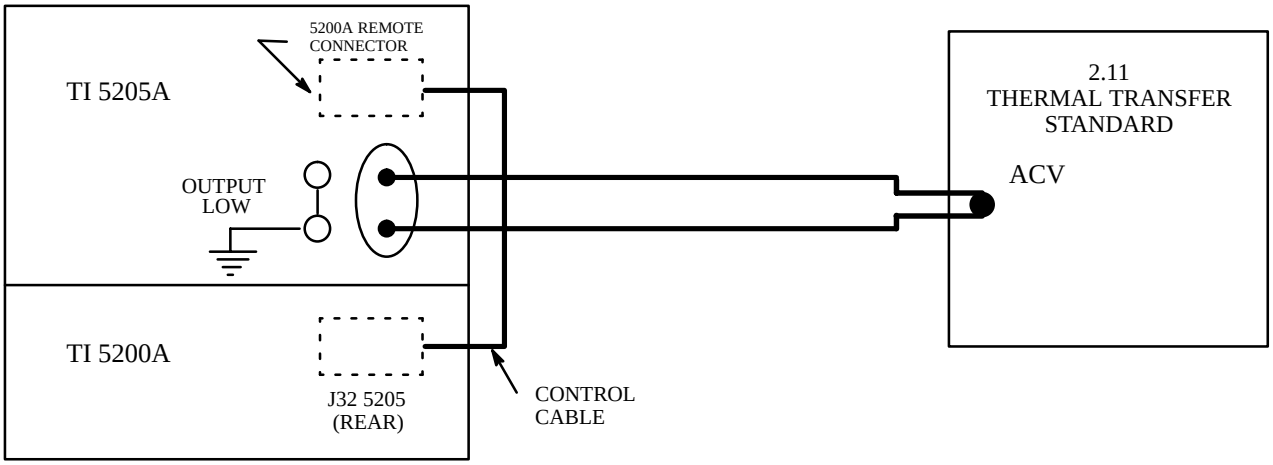

Figure 9. 1000 V Range Constant–Gain Test Configuration (using 4920M)

Figure 9E. Examples of ICP Section 4 (AC Calibrator System) (Continued)

4.9 TI EVALUATION

4.9.1 If the TI is a 5200A/5205A AC Calibration System and if all tests are satisfactory, affix a special calibration label on the 5205A indicating that it is to be used only with the 5200A with which it is calibrated up to 100 kHz only.

Example: TI to be used with:
Fluke 5200A AC Calib
Ser. XXXX only.
System Calibrated up to 100 kHz only.

Figure 9E. Examples of ICP Section 4 (AC Calibrator System) (Continued)

This page left intentionally blank.

3.8 PREPARATION OF CALIBRATION CHECKLIST

3.8.1 **Purpose in ICP**. The calibration checklist includes a listing of TI characteristics to be tested or verified, nominal values, calibration tolerances, and columns for recording measured values as initially tested and after adjustment. Both tolerance tests and functional checks are listed on the checklist (see paragraph 3.4.4.1 preceding). The checklist also serves as a tool for the calibration technician to track the calibration process and assure that all required steps are performed in the correct testing sequence. For the experienced technician, the checklist will often provide enough information to perform the calibration rather than following the step–by–step instructions in the procedure.

Typically, a checklist should be provided for each instrument covered by the procedure. However, if two or more instruments have identical characteristics or have minor differences which can be readily and unambiguously handled on one checklist, then only one checklist may be used. In General ICPs, however, checklists should be provided for representative instruments only. (See paragraph 3.10 following).

3.8.2 **Procedure for Calibration Checklist Preparation**. A blank checklist form and completed sample checklists are illustrated in Figures 10A through 10C. In addition, the example procedure, NAVAIR 17–20ICP–000, in Appendix A provides guidance as to spacing, page numbering, and typing fonts. The following details should be observed in preparation of the calibration checklist:

a. Checklist entries may be applicable to procedure operations performed in Sections 3 or 4. Entries for Section 3 may relate to TI inspections, zero settings, TI exercising, functional checks, etc., while Section 4 entries generally refer to steps in the calibration process and verification and tolerance testing of applicable TI performance characteristics.

b. The step numbers entered in column (1), Procedure Step No., should be identical with the applicable step numbers of Section 3 or 4, and all applicable steps should be included.

c. The entries for column (2), Function Tested, should be consistent with Section 3 or 4 titles or appropriately descriptive.

d. Designation and expression of values and measurement units in column (3), Nominal, and column (7), Calibration Tolerances, should be consistent with those shown in the applicable step of Section 4 of the procedure. See discussion in paragraph 3.7.2.11 preceding.

e. When a series of measurements are performed for a given step and the same measurement units apply for each measurement, a heading may be used in any column, as appropriate, to indicate the applicable units in lieu of repeating this information for each step.

f. Columns (4) and (5), Measured Values, are normally left blank, except when only a functional "check" or verification of a TI operation or function is required, or for performance tests that do not have + (plus) or – (minus) tolerances assigned, e.g., minimum and maximum values. For such items, enter "ck( )" in column (4). This serves as a reminder to the technician to perform the required verification, function, or test. Also, enter "NA" in column (6), Out of Tolerance, if the test does not verify TI accuracy, or specified performance. The "NA" serves as a reminder that the "out of tolerance" annotation is not to be used for functional or operational checks. Failure to observe this policy could result in erroneous out–of–tolerance data which is used to assess equipment reliability and establish or revise calibration intervals.

g. The spacing used between subsection entries on the checklist may be adjusted as necessary to conserve space and enable reductions in the total number of pages required for the checklist. For example, if a checklist can be completed in two pages without spaces between subsections, but would require three pages with spaces, then omission of the spaces would be in order. Another means of reducing total space requirements is to omit two–digit section titles from the checklist and identify the test within the three–digit subsection entry.

h. Redundancy should be avoided through the use of ditto (”)marks in each column, as applicable (See Appendix A).

EXAMPLES OF ICP CHECKLIST SECTION

Figure

10A Digital Nanovoltmeter

10B Angle Gage Blocks

10C B.I.M. Blades Check and Fill Units

10D Scalar Network Analyzers

10E AC Calibration System

Figure 10. Examples of ICP Checklists

CALIBRATION CHECKLIST NAVAIR 17−20XX−123

TEST INST (S) Keithley 181 Digital Nanovoltmeter

PROC. NO. NA 17−20XX−123 MFG. MODEL SER. NO.

PROCEDURE STEP NO. (1)	FUNCTION TESTED (2)	NOMINAL (3)	MEASURED VALUES FIRST RUN (4)	MEASURED VALUES SECOND RUN (5)	OUT OF TOL (6)	CALIBRATION TOLERANCES (7)
3.5.14	IEEE Bus Test		ck ( )			TI and 1720 are same
4.1	Zero Function Test					
4.1.4	Number on TI display					Record
4.1.5	TI ZERO lamp		ck ( )		NA	illuminated
”	TI value	0.00000				0.00000
4.1.7	Number on TI display				NA	Record
4.1.9	Sum		ck ( )			(4.1.4)+(4.1.7)=(4.1.8)
4.2	Damping, Filter, Hi Resolution Function Tests					
4.2.2	Stabilizing Time				NA	Record
4.2.3	TI DAMPING lamp		ck ( )		NA	illuminated
4.2.4	Stabilizing Time				NA	Record
4.2.5	Time		ck ( )			(4.2.4) > (4.2.2)
4.2.6	TI FILTER lamp		ck ( )		NA	illuminated
4.2.7	Stabilizing Time		ck ( )		NA	Record
4.2.8	Time		ck ( )		NA	(4.2.7) > (4.2.4)
4.2.9	TI HI RES		ck ( )		NA	adds a digit to display
4.3	Noise Test					
4.3.4	Highest vs. lowest TI readings		ck ( )		NA	< 30 counts in 2 min.
4.4	DC Voltage Tests					
4.4.4	Voltage (V)	(V)				(V)
”	0	0				−0.00002 to 0.00002
”	4	4				3.9994 to 4.0006
”	8	8				7.9990 to 8.0010
”	12	12				11.9986 to 12.0014
”	16	16				15.9982 to 16.0018

Page 1 of 2

Figure 10A. Examples of ICP Checklist (Digital Nanovoltmeter)

NAVAIR 17−20XX−123
CALIBRATION CHECKLIST

TEST INST (S) Keithley 181 Digital Nanovoltmeter

PROC. NO. NA 17−20XX−123 MFG. MODEL SER. NO.

PROCEDURE STEP NO. (1)	FUNCTION TESTED (2)	NOMINAL (3)	MEASURED VALUES FIRST RUN (4)	MEASURED VALUES SECOND RUN (5)	OUT OF TOL (6)	CALIBRATION TOLERANCES (7)
	Voltage (V)	(V)				(V)
4.4.4	19	19				18.9979 to 19.0021
”	−19	−19				−18.9979 to −19.0021
4.4.6	1.9	1.9				1.89985 to 1.90015
”	190	190				189.979 to 190.021
”	1000	1000				999.88 to 1000.12
4.4.8	0.4	0.4 mV				0.39989 to 0.40011 mV
”	0.8	0.8				0.79983 to 0.80017
”	1.2	1.2				1.19977 to 1.20023
”	1.6	1.6				1.59971 to 1.60029
”	1.9	1.9				1.89967 to 1.90033
”	0.4	4 mV				3.9992 to 4.0008 mV
”	0.8	8				7.9986 to 8.0014
”	1.2	12				11.9980 to 12.0020
”	1.6	16				15.9974 to 16.0026
”	1.9	19				18.9970 to 19.0030
”	0.4	40 mV				39.992 to 40.008 mV
”	0.8	80				79.986 to 80.014
”	1.2	120				119.980 to 120.020
”	1.6	160				159.974 to 160.026
”	1.9	190				189.970 to 190.030
4.5	Analog Output Test					
4.5.3	4	0.4				0.3984 to 0.4016
”	8	0.8				0.7978 to 0.8022
”	12	1.2				1.1972 to 1.2028
”	16	1.6				1.5966 to 1.6034
”	19	1.9				1.8962 to 1.9038

Page 2 of 2

Figure 10A. Examples of ICP Checklist (Digital Nanovoltmeter) (Continued)

CALIBRATION CHECKLIST NAVAIR 17−20XX−123

TEST INST (S) Weber Gage Div. AG18TR Angle Gage Block Set

PROC. NO. NA 17−20XX−123 MFG. MODEL SER. NO.

PROCEDURE STEP NO. (1)	FUNCTION TESTED (2)	NOMINAL (3)	MEASURED VALUES FIRST RUN (4)	MEASURED VALUES SECOND RUN (5)	OUT OF TOL (6)	CALIBRATION TOLERANCES (7)
3.2	TI inspection	– –	ck ( )		NA	
4.1	Flatness Tests		Surf. #1	Surf. #2		
			(µin.)	(µin.)		(µin.)
4.1.8	1° (length)	– –				6 max.
”	(width)	– –				4 ”
4.1.9	3° (length)	– –				6 ”
”	(width)	– –				4 ”
”	5° (length)	– –				6 ”
”	(width)	– –				4 ”
”	15° (length)	– –				6 ”
”	(width)	– –				4 ”
”	30° (length)	– –				6 ”
”	(width)	– –				4 ”
”	45° (length)	– –				6 ”
”	(width)	– –				4 ”
”	1 min. (length)	– –				6 ”
”	(width)	– –				4 ”
”	3 min. (length)	– –				6 ”
”	(width)	– –				4 ”
”	5 min. (length)	– –				6 ”
”	(width)	– –				4 ”
”	20 min. (length)	– –				6 ”
”	(width)	– –				4 ”
”	30 min. (length)	– –				6 ”
”	(width)	– –				4 ”
”	1 sec. (length)	– –				6 ”
”	(width)	– –				4 ”

Page 1 of 2

Figure 10B. Examples of ICP Checklist (Angle Gage Blocks)

CALIBRATION CHECKLIST NAVAIR 17−20XX−123

TEST INST (S) Weber Gage Div. AG18TR Angle Gage Block Set

PROC. NO. NA 17−20XX−123 MFG. MODEL SER. NO.

PROCEDURE STEP NO. (1)	FUNCTION TESTED (2)	NOMINAL (3)	MEASURED VALUES FIRST RUN (4)	MEASURED VALUES SECOND RUN (5)	OUT OF TOL (6)	CALIBRATION TOLERANCES (7)
			Surf. #1	Surf. #2		
			(µin.)	(µin.)		(µin.)
4.1.9	3 sec. (length)	– –				6 ”
”	(width)	– –				4 ”
”	5 sec. (length)	– –				6 ”
”	(width)	– –				4 ”
”	20 sec. (length)	– –				6 ”
”	(width)	– –				4 ”
”	30 sec. (length)	– –				6 ”
”	(width)	– –				4 ”
4.2	Angle Measurement Tests		(sec. arc)	(sec. arc)		(sec. arc)
4.2.18	1° of arc	1°				−1 to +1
4.2.19	3° ”	3°				”
”	5° ”	5°				”
”	15° ”	15°				”
”	30° ”	30°				”
”	45° ”	45°				”
”	1 min. of arc					”
”	3 min. ”					”
”	5 min. ”					”
”	20 min. ”					”
”	30 min. ”					”
”	1 min. of arc					”
”	3 min. ”					”
”	5 min. ”					”
”	20 min. ”					”
”	30 min. ”					”

Page 2 of 2

Figure 10B. Examples of ICP Checklist (Angle Gage Blocks) (Continued)

CALIBRATION CHECKLIST NAVAIR 17−20XX−123

TEST INST (S) Sikorsky Aircraft Division, United Technologies Corp. S1670−15002−2 and 70700−77669−041 B.I.M. Blades Check and Fill Unit

PROC. NO. NA 17−20XX−123 MFG. MODEL SER. NO.

PROCEDURE STEP NO. (1)	FUNCTION TESTED (2)	NOMINAL (3)	MEASURED VALUES FIRST RUN (4)	MEASURED VALUES SECOND RUN (5)	OUT OF TOL (6)	CALIBRATION TOLERANCES (7)
3.1	TI inspection	−−	ck ( )		NA	
4.1	Absolute Pressure Gage Tests Using the ADC					
	0 to 29.9 in Hg abs gage (red scale)					
	Increasing vacuum	(in Hg)	(in Hg)			(in Hg abs)
4.1.5.3	TI gage ind.	29.9				29.801 to 29.999
4.1.5.4	”	20.0				19.901 to 20.099
”	”	10.0				9.901 to 10.099
”	”	5.0				4.901 to 5.099
	Decreasing vacuum	(in Hg)	(in Hg)			(in Hg abs)
4.1.5.4	TI gage ind.	10.0				9.901 to 10.099
”	”	20.0				19.901 to 20.099
”	”	29.9				29.801 to 29.999
	0 to 20 psig gage (black scale)					
	Increasing vacuum	(psig)	(psia)			(psia)
4.1.11.4	TI gage ind.	5				19.5855 to 19.8145
4.1.11.5	”	10				24.5855 to 24.8145
”	”	15				29.5855 to 29.8145
”	”	20				34.5855 to 34.8145
	Decreasing vacuum	(psig)	(psia)			(psia)
4.1.11.5	TI gage ind.	15				29.5855 to 29.8145
”	”	10				24.5855 to 24.8145
”	”	5				19.5855 to 19.8145

Page 1 of 2

Figure 10C. Examples of ICP Checklist (B.I.M. Blades Check and Fill Units)

NAVAIR 17−20XX−123
CALIBRATION CHECKLIST

TEST INST (S) Sikorsky Aircraft Division, United Technologies Corp. S1670−15002−2 and 70700−77669−041 B.I.M. Blades Check and Fill Unit

PROC. NO. NA 17−20XX−123 MFG. MODEL SER. NO.

PROCEDURE STEP NO. (1)	FUNCTION TESTED (2)	NOMINAL (3)	MEASURED VALUES FIRST RUN (4)	MEASURED VALUES SECOND RUN (5)	OUT OF TOL (6)	CALIBRATION TOLERANCES (7)
4.2	Absolute Pressure Gage Tests Using the APC					
	0 to 29.9 in Hg abs gage (red scale)					
	Increasing vacuum	(in Hg)	(in Hg)			(in Hg abs)
4.2.6	TI gage ind.	29.9				29.801 to 29.999
4.2.7	”	20.0				19.901 to 20.099
”	”	10.0				9.901 to 10.099
”	”	5.0				4.901 to 5.099
	Decreasing pressure	(in Hg)	(in Hg)			(in Hg abs)
4.2.8	TI gage ind.	10.0				9.901 to 10.099
”	”	20.0				19.901 to 20.099
”	”	29.9				29.801 to 29.999
	0 to 20 psig gage (black scale)					
	Increasing pressure	(psig)	(psig)			(psig)
4.2.14	”	5				4.934 to 5.066
”	”	10				9.934 to 10.066
”	”	15				14.934 to 15.066
”	”	20				19.934 to 20.066
	Decreasing pressure	(psig)	(psig)			(psig)
4.2.14	”	15				14.934 to 15.066
”	”	10				9.934 to 10.066
”	”	5				4.934 to 5.066
4.5	Temperature Indication Test					
4.5.2	Bimetallic thermometer	−−		ck ( )		±2°F
	cal. per ST−02					

Page 2 of 2

Figure 10C. Examples of ICP Checklist (B.I.M. Blades Check and Fill Units) (Continued)

CALIBRATION CHECKLIST NAVAIR 17−20XX−123

TEST INST (S) Hewlett−Packard 8757A, 8757AOPT001, 8757C, 8757COPT001, 8757D, 8757E, and 8757EOPT910 Scalar Network Analyzers with 11664A/E Series Detectors

PROC. NO. NA 17−20XX−123 MFG. MODEL SER. NO.

PROCEDURE STEP NO. (1)	FUNCTION TESTED (2)	NOMINAL (3)	MEASURED VALUES FIRST RUN (4)	MEASURED VALUES SECOND RUN (5)	OUT OF TOL (6)	CALIBRATION TOLERANCES (7)
3.2[1]	Connector Dimensions	−−	ck ( )			Within tolerance per
						Appendix B
3.6	Self test	−−	ck ( )			No error messages displayed
4.1	Dynamic Range Test					
4.1.5	Input cursor value:					
”	A Input (with signal)	−−	ck ( )			≥ +16 dBm
4.1.8	A Input (no signal)	−−	ck ( )			≤ −60 dBm
4.1.10	B Input (with signal)	−−	ck ( )			≥ +16 dBm
”	B Input (no signal)	−−	ck ( )			≤ −60 dBm
4.1.12[2]	C Input (with signal)	−−	ck ( )			≥ +16 dBm
”	C Input (no signal)	−−	ck ( )			≤ −60 dBm
4.1.14	R Input (with signal)	−−	ck ( )			≥ +16 dBm
”	R Input (no signal)	−−	ck ( )			≤ −60 dBm
4.2	Dynamic Power Accuracy Test					
4.2.3	Calib. power level @:					
”	+10 dBm nom. power				NA	Record
”	+6 ” ” ”				NA	”
”	+3 ” ” ”				NA	”
”	−3 ” ” ”				NA	”
”	−6 ” ” ”				NA	”
”	−10 ” ” ”				NA	”
”	−13 ” ” ”				NA	”
”	−16 ” ” ”				NA	”
”	−20 ” ” ”				NA	”
”	−25 ” ” ”				NA	”
”	−30 ” ” ”				NA	”

[1] If applicable.
[2] TIs with OPT001 only.

Page 1 of 5

Figure 10D. Examples of ICP Checklist (Scalar Network Analyzers)

CALIBRATION CHECKLIST NAVAIR 17−20XX−123

TEST INST (S) Hewlett−Packard 8757A, 8757AOPT001, 8757C, 8757COPT001, 8757D, 8757E, and 8757EOPT910 Scalar Network Analyzers with 11664A/E Series Detectors

PROC. NO. NA 17−20XX−123 MFG. MODEL SER. NO.

PROCEDURE STEP NO. (1)	FUNCTION TESTED (2)	NOMINAL (3)	MEASURED VALUES FIRST RUN (4)	MEASURED VALUES SECOND RUN (5)	OUT OF TOL (6)	CALIBRATION TOLERANCES (7)
4.2.15	R Input dyn. acc. error @:	(dB)				(dB)
”	−30 ” ” ”	0				−0.30 to +0.30
”	−35 ” ” ”	0				−0.30 to +0.30
”	−40 ” ” ”	0				−0.30 to +0.30
”	−45 ” ” ”	0				−0.35 to +0.35
”	−50 ” ” ”	0				−0.40 to +0.40
”	−55 ” ” ”	0				−0.80 to +0.80
”	−60 ” ” ”	0				−1.20 to +1.20
”	R Input cur. val. ref.	−−	ck ( )			Recorded A Cur Ref
						±0.02 dB
4.3	Modulator Drive Tests					
4.3.1	Voltage Amplitude Accuracy Test					
4.3.1.4	Square wave amplitude:					
”	Positive half	−−	ck ( )			≥2.2 V
”	Negative half	−−	ck ( )			≥2.2 V
4.3.2	Frequency Accuracy and Symmetry Test					
4.3.2.3	Modulation frequency	27.778 kHz				27.766 to 27.790 kHz
4.3.2.5	Waveform period:					
”	Positive half	18.00 µs				17.65 to 18.35 µs
”	Negative half	18.00 µs				17.65 to 18.35 µs

Page 5 of 5

Figure 10D. Examples of ICP Checklist (Scalar Network Analyzers) (Continued)

CALIBRATION CHECKLIST NAVAIR 17−20XX−123

TEST INST (S) Fluke 5200A, 5200AOPT005, and 5200A/5205A AC Calibrator

PROC. NO. NA 17−20XX−123 MFG. MODEL SER. NO.

PROCEDURE STEP NO. (1)	FUNCTION TESTED (2)	NOMINAL (3)	MEASURED VALUES FIRST RUN (4)	MEASURED VALUES SECOND RUN (5)	OUT OF TOL (6)	CALIBRATION TOLERANCES (7)
4.1	Frequency Tests					
4.1.2	Line V Freq Range	(ms)	(ms)			(ms)
”	105 100 Hz	100.0				98.0 to 102.0
”	” ”	10.00				9.89 to 10.11
”	115 1 kHz	9.00				8.83 to 9.18
”	” ”	4.50				4.43 to 4.57
”	” ”	3.00				2.96 to 3.04
4.1.2		(Hz)	(Hz)			(Hz)
”	115 1 kHz	444.4				439.0 to 449.8
”	” ”	555.5				548.9 to 562.1
”	” ”	666.6				658.9 to 674.3
”	” ”	777.7				768.9 to 786.5
”	” ”	888.8				878.9 to 898.7
”	” ”	999.9				988.9 to 1010.9
”	” ”	1111.1				1099.0 to 1123.2
”	125 10 kHz	5000				4940 to 5060
”	” ”	10000				9890 to 10,110
”	” 100 kHz	50000				49,400 to 50,600
”	” ”	100000				98,900 to 101,100
*”	” 1 MHz	1000000				967,000 to 1,033,000
	NOTE					
	Two independent subsections, 4.2 and 4.3, are provided for distortion−type measurements. Completion of either subsection makes the other subsection inapplicable.					
4.2	Harmonic Distortion and Noise Measurements Using the DMS (item 2.3)					
	Voltage Range / Freq Setting	Voltage Setting				(%)
4.2.3.7	100 mV 25 Hz	100.0000	ck ( )			0.050 or less
”	1 V ”	1.000000	ck ( )			0.041 or less

* This test does not apply for the 5200A/5205A system.

Page 1 of 8

Figure 10E. Examples of ICP Checklist (AC Calibration System)

CALIBRATION CHECKLIST NAVAIR 17−20XX−123

TEST INST (S) Fluke 5200A, 5200AOPT005, and 5200A/5205A AC Calibrator

PROC. NO. NA 17−20XX−123 MFG. MODEL SER. NO.

PROCEDURE STEP NO. (1)	FUNCTION TESTED (2)		NOMINAL (3)	MEASURED VALUES FIRST RUN (4)	MEASURED VALUES SECOND RUN (5)	OUT OF TOL (6)	CALIBRATION TOLERANCES (7)
	Voltage	Freq	Voltage				
	Range	Setting	Setting				(%)
4.2.3.7	100 mV	25 Hz	100.0000	ck ( )			0.050 or less
”	10 V	”	10.00000	ck ( )			0.040 or less
”	100 V	”	100.0000	ck ( )			”
”	100 V	10 kHz	100.0000	ck ( )			0.040 or less
”	10 V	”	10.00000	ck ( )			”
”	1 V	”	1.000000	ck ( )			0.041 or less
”	100 mV	”	100.0000	ck ( )			0.050 or less
”	100 mV	50 kHz	100.0000	ck ( )			”
”	1 V	”	1.000000	ck ( )			0.041 or less
”	10 V	”	10.00000	ck ( )			0.040 or less
”	100 V	”	100.0000	ck ( )			”
”	100 V	100 kHz	100.0000	ck ( )			0.140 or less
”	10 V	”	10.00000	ck ( )			”
”	1 V	”	1.000000	ck ( )			0.141 or less
”	100 mV	”	100.0000	ck ( )			0.150 or less
”	1000 V*	”	300.000	ck ( )			0.200 or less
”	1000 V*	50 kHz	300.000	ck ( )			0.090 or less
”	1000 V*	10 kHz	300.000	ck ( )			0.050 or less
”	1000 V*	25 Hz	300.000	ck ( )			”
	*For TIs with HV Amplifier only (5205A)						
4.3	Harmonic Distortion and Noise: Alternate Method						
	Voltage	Freq	Voltage				
	Range	Setting	Setting				(%)
4.3.6	1 V	100 Hz	0.300000	ck ( )			Distortion 0.07 or less
4.3.14	10 V	”	3.0000	ck ( )			Distortion 0.43 or less

Page 2 of 8

Figure 10E. Examples of ICP Checklist (AC Calibration System) (Continued)

CALIBRATION CHECKLIST NAVAIR 17−20XX−123

TEST INST (S) Fluke 5200A, 5200AOPT005, and 5200A/5205A AC Calibrator

PROC. NO. NA 17−20XX−123 MFG. MODEL SER. NO.

PROCEDURE STEP NO. (1)	FUNCTION TESTED (2)		NOMINAL (3)	MEASURED VALUES FIRST RUN (4)	MEASURED VALUES SECOND RUN (5)	OUT OF TOL (6)	CALIBRATION TOLERANCES (7)
	Voltage	Freq	Voltage				
	Range	Setting	Setting				(%)
4.3.19	1	1000 Hz	0.300000	ck ( )			Distortion 0.07 or less
”	10	1000 Hz	3.0000	ck ( )			Distortion 0.43 or less
4.3.21	1	20 kHz	0.30000	ck ( )			Distortion 0.07 or less
”	10	20 kHz	3.0000	ck ( )			Distortion 0.43 or less
4.3.22	100.0000 mV	100.00 Hz	−−	ck ( )			±0.08 or less
”	”	1.0000 kHz	−−	ck ( )			”
”	”	10.000 kHz	−−	ck ( )			”
”	”	50.00 kHz	−−	ck ( )			±0.08 or less
”		100.00 kHz	−−	ck ( )			”
”	1.000000 mV	100.00 Hz	−−	ck ( )			±0.07 or less
”	”	1 kHz	−−	ck ( )			”
”	”	10 kHz	−−	ck ( )			”
”	”	50 kHz	−−	ck ( )			”
”	”	100 kHz	−−	ck ( )			”
”	100.0000	100 Hz	−−	ck ( )			”
”	”	1 kHz	−−	ck ( )			”
”	”	10 kHz	−−	ck ( )			”
”	”	50 kHz	−−	ck ( )			”
”	”	100 kHz	−−	ck ( )			”
”	0300.000	100 Hz	−−	ck ( )			±0.08 or less
”	”	1 kHz	−−	ck ( )			”
”	”	10 kHz	−−	ck ( )			”
”	”	50 kHz	−−	ck ( )			±0.10 or less
”	”	100.00 kHz	−−	ck ( )			”

Page 3 of 8

Figure 10E. Examples of ICP Checklist (AC Calibration System) (Continued)

CALIBRATION CHECKLIST NAVAIR 17−20XX−123

TEST INST (S) Fluke 5200A, 5200AOPT005, and 5200A/5205A AC Calibrator

PROC. NO. NA 17−20XX−123 MFG. MODEL SER. NO.

PROCEDURE STEP NO. (1)	FUNCTION TESTED (2)	NOMINAL (3)	MEASURED VALUES FIRST RUN (4)	MEASURED VALUES SECOND RUN (5)	OUT OF TOL (6)	CALIBRATION TOLERANCES (7)
	Voltage Freq.					(V)
4.8.4.7	350 V 30 Hz	−−				349.8400 to 350.1600
”	” 50 kHz	−−				349.6700 to 350.3300
”	300 V 100 kHz	−−				299.6000 to 300.4000
”	200 V 50 kHz	−−				199.7900 to 200.2100
”	” 400 Hz	−−				199.9000 to 200.1000
4.8.4.9	100 mV, 10 mV and 1 mV Range Accuracy Tests					
	Freq Voltage Range	(%)				(%)
4.8.4.12	100 kHz 100 mV	−−				±0.070 or less
”	” 10 mV	−−				±0.250 or less
”	” 1 mV	−−				±2.05 or less
4.8.4.13	20 kHz 100 mV	−−				±0.03 or less
”	” 10 mV	−−				±0.12 or less
”	” 1 mV	−−				±1.02 or less
”	30 Hz 100 mV	−−				±0.03 or less
”	” 10 mV	−−				±0.12 or less
”	” 1 mV	−−				±1.02 or less
4.9	TI Evaluation					
4.9.1	Special cal label	−−	ck ( )			Label affixed
	If the TI is a 5200A/5205A AC Calibration System and if all tests are satisfactory, affix a special calibration label on the 5205A indicating that it is to be used only with the 5200A with which it is calibrated up to 100 kHz only.					

Page 8 of 8

Figure 10E. Examples of ICP Checklist (AC Calibration System) (Continued)

3.9 **APPENDICES**.

Appendices should be included in calibration procedures to provide supplementary information as TI standardization, special adjustment and alignment, sample test reports, reference material, or other essential information which may not be appropriate for inclusion in the main body of the procedure. An appendix, typically Appendix A, is always included in a General ICP to list representative test instruments; the use of an appendix for this purpose is discussed in paragraph 3.10 following. Figures 11A through 11D provide examples of appendices.

EXAMPLES OF ICP APPENDICES

Figure

11A Dimensional Tolerances For Critical Portions Of Military Type N Connectors Used In Precision Measurement Equipment (Appendix A)

11B Feedthrough Termination Fabrication (Appendix A)

11C Tuning Frequency Accuracy Worksheet (Appendix A)

11D Pressure Unit Conversion Factors (Appendix B)

11E Power Linearity Worksheet (Appendix B)

11F Power Measurement Accuracy Worksheet (Appendix C)

Figure 11. Examples of ICP Appendices

This page left intentionally blank.

APPENDIX A

DIMENSIONAL TOLERANCES FOR CRITICAL PORTIONS OF MILITARY TYPE N CONNECTORS USED IN PRECISION MEASUREMENT EQUIPMENT

Information for the drawings was derived from Military Specifications MIL–C–71B and MIL–C–39012/( ) D. MIL–C–39012/( )D supersedes MIL–C–71B as of 23 Nov 66.

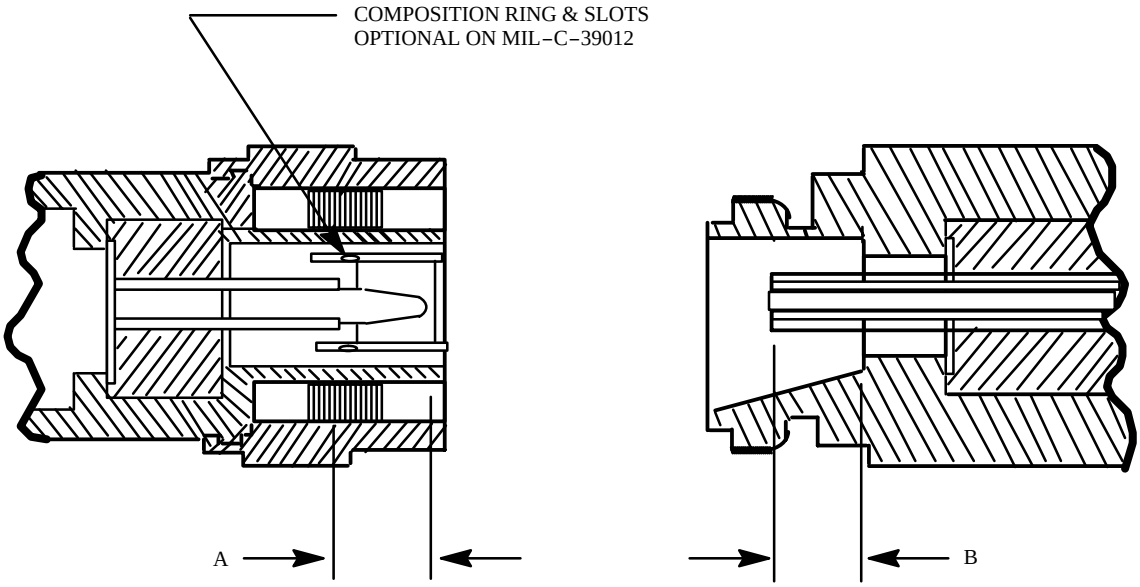

NOTE
IF THE TI CANNOT BE IDENTIFIED AS BEING BUILT TO MIL–C–71B, MIL–C–39012/( )D OR SPECIFIC MANUFACTURER SPECIFICATIONS, USE A TOLERANCE OF 0.208" TO 0.233" FOR THE TYPE–N MALE AND 0.187" TO 0.207" FOR THE TYPE–N FEMALE.

SPECIFICATION	(MALE) A (INCHES)	(FEMALE) B (INCHES)
MIL–C–39012/( )D (CLASS II)	0.210 MIN	0.197 ±0.010
MIL–C–71B	0.223 ±0.010	0.197 ±0.010

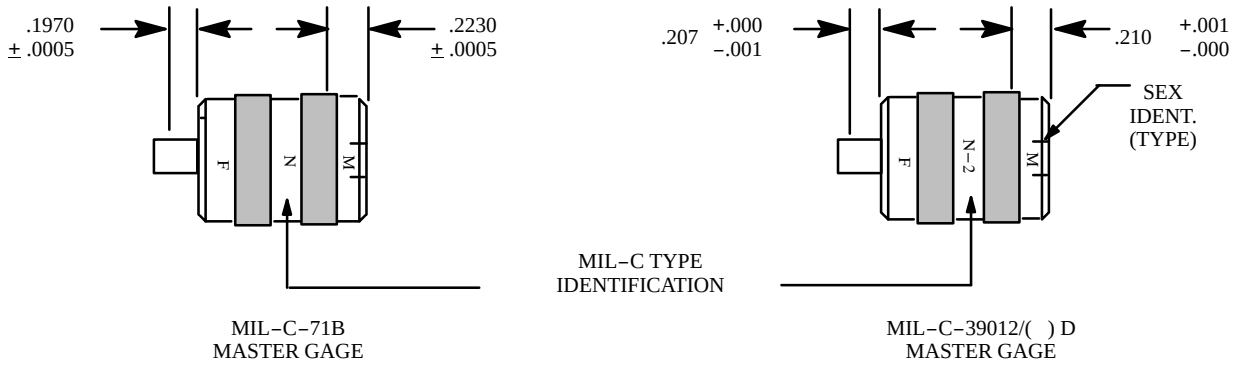

NOTE:
THE MAURY A–007 KIT SPECIFIED IN SECTION 2 CONTAINS ONLY THE MIL–C–71B GAGE.

NOTE:
THE MAURY A–007A KIT SPECIFIED IN SECTION 2 CONTAINS ONLY THE MIL–C–39012 GAGE.

NOTE:
THE MAURY A–007B KIT SPECIFIED IN SECTION 2 CONTAINS THE MIL–C–71B AND MIL–C–39012 GAGES.

Figure 11A. Example of ICP Appendices (Appendix A)

APPENDIX A

FEEDTHROUGH TERMINATION FABRICATION

(BNC Female to BNC Male)

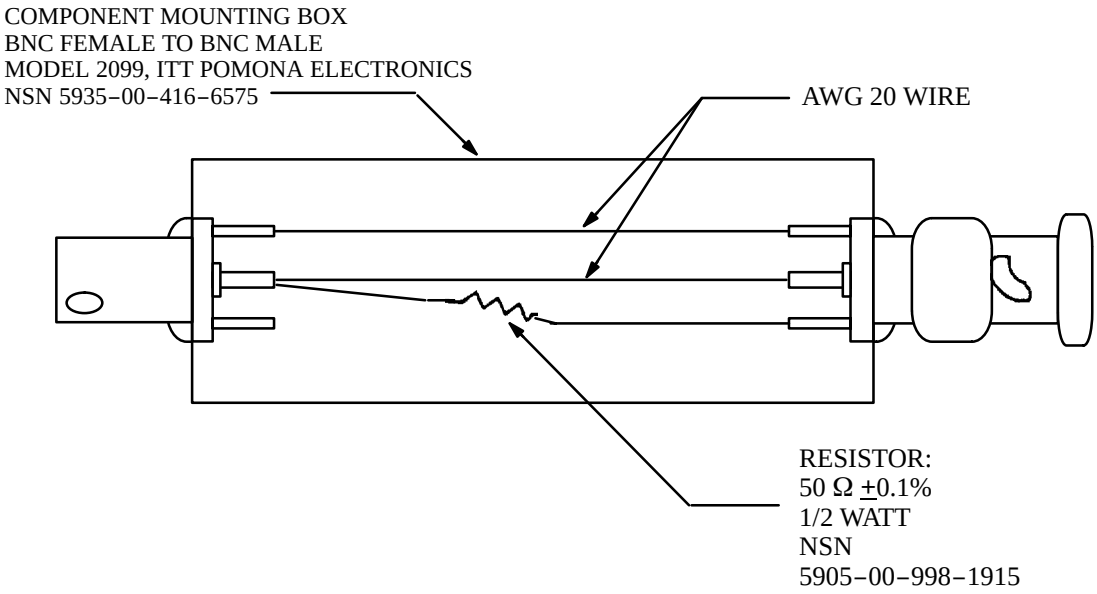

Figure 11B. Example of ICP Appendices (Appendix A)

APPENDIX A

TUNING FREQUENCY ACCURACY WORKSHEET

(Lower 3 dB Frequency + Upper 3 dB Frequency) ÷ 2 = TI Center Frequency

Example: Lower 3 dB frequency = 6 MHz
Upper 3 dB frequency = 14.2 MHz

(6 MHz + 14.2 MHz) ÷ 2 = TI center frequency
(20.2 MHz) ÷ 2 = TI center frequency
10.1 MHz = center frequency

Step	Nominal Tuned Frequency (MHz)		Lower 3 dB Frequency		Upper 3 dB Frequency				TI Center Frequency
4.1.8	10	(	_____	+	_____	)	÷	2 =	_____
4.1.9	100	(	_____	+	_____	)	÷	2 =	_____
”	300	(	_____	+	_____	)	÷	2 =	_____
”	500	(	_____	+	_____	)	÷	2 =	_____
”	750	(	_____	+	_____	)	÷	2 =	_____
”	1,000	(	_____	+	_____	)	÷	2 =	_____
”	1,250	(	_____	+	_____	)	÷	2 =	_____
”	1,500	(	_____	+	_____	)	÷	2 =	_____
”	*1,600	(	_____	+	_____	)	÷	2 =	_____

*Applies to TIs with Serial Prefix of ≥2509A only

Figure 11C. Example of ICP Appendices (Appendix A)

APPENDIX B

PRESSURE UNIT CONVERSION FACTORS*

Select the conversion factor that will profile a comparison of measurements relative to a common temperature, e.g., if the standard and the TI provide measurements in inches of water and the standard references 4°C while the TI references 20°C, multiply the TI values by .9982.

	lb/in^2	in of H_20 (20°C)	in of Hg (0°C)	in of H_20 (4°C)	mm of Hg (0°C)	Pascal
lb/in^2=	1	27.730	2.0360	27.681	51.715	6.89476×10^3
in of H_20 = (20°C)	3.6063×10^{-2}	1	7.3425×10^{-2}	.9982	1.8650	2.48646×10^2
in of Hg = (0°C)	.49115	13.619	1	13.595	25.400	3.38638×10^3
in of H_20 = (4°C)	3.6126×10^{-2}	1.0018	7.3554×10^{-2}	1	1.8683	2.49082×10^2
mm of Hg = (0°C)	1.9337×10^{-2}	.53620	3.9370×10^{-2}	.53525	1	1.33322×10^2
1 Atmosphere	14.696	407.51	29.921	406.80	760.00	1.01325×10^5
PASCAL=	1.45038×10^{-4}	4.0218×10^{-3}	2.95300×10^{-4}	4.0147×10^{-3}	7.50064×10^{-3}	1

* These conversion factors are in accordance with SECNAVINST 4120.19 OP–401E of June 1978, ASTM E380 (Amer. Nat. Std. Z210.1) of January 1976 and NBS Monograph 8 National Bureau of Standards May 1960.

Figure 11D. Example of ICP Appendices (Appendix B)

APPENDIX B

POWER LINEARITY WORKSHEET

NOTE

It may be advisable to make multiple copies of this worksheet for use in calculating the “10 dB change” values for the various test frequencies and TI Detector(s).

(4.3.10)	TI Power indication, P_1	=	_____
(4.3.11)	DMM Voltage indication, V_1	=	_____
(4.3.12)	TI Power indication, P_2	=	_____
(4.3.13)	DMM voltage indication, V_2	=	_____
(4.3.14.2)	DMM voltage indication, V_0	=	_____
(4.3.14.5)	DMM voltage indication, V_{comp}	=	_____
(4.3.15)	Calculate “10 dB change”,	=	_____

Equation 1:

$$10\text{ dB change} = \left[10 \times \text{Log} \left[\frac{(2 \times V_{comp} \times (V_1 - V_0) + V_0^2 - V_1^2)}{(2 \times V_{comp} \times (V_2 - V_0) + V_0^2 - V_2^2)} \right] \right]$$

Where,

V_1 = $V_{comp} - V_{rf}$ (RF power off)

V_0 = $V_{comp} - V_{rf}$ (RF power on)

V_1 = $V_{comp} - V_{rf}$ (RF power on)

V_{comp} = Power Meter compensation bridge voltage

Figure 11E. Example of ICP Appendices (Appendix B)

APPENDIX C

POWER MEASUREMENT ACCURACY WORKSHEET

NOTE

It may be advisable to make multiple copies of this worksheet for use in calculating the “Power Level” values for the various test frequencies and TI Detector(s).

	Test Frequency	= _____
(4.1.2.4)	Power Meter #1 resistance, R	= _____
(4.4.1.10)	TI Power indication, P	= _____
(4.4.1.12)	DMM voltage indication, V_1	= _____
(4.4.1.13.2)	DMM voltage indication, V_0	= _____
(4.4.1.13.5)	DMM voltage indication, V_{comp}	= _____
(4.4.1.13.9)	DMM voltage indication, V_{comp}	= _____
(4.4.1.14)	Calculate “Power Level”,	=

Equation 1:

$$10\ \text{dB change} = \left[10 \times \log\left(\frac{\left[2 \times V_{comp} \times (V_1 - V_0) + V_0^2 - V_1^2\right]}{0.001 \times 4 \times R \times CF}\right)\right]$$

Where: CF = Calibration Factor on Report of Calibration at test frequency for thermistor mount

V_1 = $V_{comp} - V_rf$ (RF power off)

V_0 = $V_{comp} - V_{rf}$ (RF power on)

V_{comp} = Power meter compensation bridge voltage

R = 200 Ω operating resistance for power meter #1

P = TI power level reading

Figure 11F. Example of ICP Appendices (Appendix C)

3.10 GENERAL ICPS

General ICPs should be prepared when multiple instruments within a generic class are to be calibrated in one ICP. Examples of applications for General ICPs include pressure measuring instruments, thermometers, micrometers, multimeters and decade resistors. Use of General ICPs represent a cost effective approach to providing ICP coverage for a generic class of instruments. Special considerations applicable to the preparation of General ICPs are discussed below:

3.10.1 **Test Instrument Identification**. Paragraph 1.1 of Section 1 of the General ICP should refer to Appendix A which lists representative instruments that can be calibrated by the procedure (see Figures 12 and 13 for examples of Section 1 and Appendix A in a General ICP). In addition to the TI identification, Appendix A should include specific TI characteristics and performance specifications for each model–manufacturer TI number covered, similar to that normally presented in Table 1, Calibration Description (see paragraph 3.4 preceding).

3.10.2 **Performance Specifications**. The performance specifications listed in Section 1, Table 1 of the General ICP should refer to Appendix A for applicable TI tolerances. Figure 12 illustrates this approach.

3.10.3 **Identification of TI Controls and Control Settings**. Since a group of TIs are covered in a General ICP, controls and control settings should be described in general terms in Sections 3 and 4 of the procedure.

3.10.4 **Calibration Checklists**. Representative TIs should be selected for which sample checklists will be included in the General ICP. The sample checklists should be of adequate quantity and diversification to fully demonstrate the broad application of the ICP with regard to ranges, tolerances, and/or other performance characteristics. It may also be necessary to provide guidance in the ICP (typically Section 3) for determining calibration test points and/or other information applicable to a specific TI type (see Figure 14).

SECTION 1

INTRODUCTION AND DESCRIPTION

1.1 This procedure describes the calibration of the Sikorsky Aircraft Division, United Technologies Corp. S1670–15000–25, S1670–15002–2 and 70700–77669–041 B.I.M. Blades Check and Fill Units. Instruments that can be calibrated using this procedure include, but are not limited to, the models listed in Appendix A. The instrument being calibrated is referred to herein as the TI (Test Instrument).

1.2 All comments concerning this procedure should be directed to Navy Measurement Science Directorate, Naval Warfare Assessment Division, P.O. Box 5000, Corona, CA 91718–5000.

1.3 This procedure includes tests of essential performance parameters only. Any malfunction noticed during calibration, whether specifically tested for or not, should be corrected.

Table 1. Calibration Description

TI Characteristics	Performance Specifications	Test Method
Increasing and decreasing pressure indication		
Absolute pressure gage	Ranges: 0 to 34.7 psia 0 to 30 in Hg absolute Tolerance: ±0.33% fs of each range	Comparison to an air data calibrator, using a nitrogen cylinder and vacuum pump to supply the pressure and vacuum, and the calibrator for pressure/vacuum control. Alternatively, same as above except using an automatic pressure calibrator.
Nitrogen regulated pressure gage	Range: 0 to 60 psig or 0 to 200 psig (S1670–15000–25 only) Tolerance: ±2% fs	Comparison to an automatic pressure calibrator, using a nitrogen cylinder to supply the pressure and the calibrator for pressure control.
Nitrogen cylinder pressure gage	Range: 0 to 4000 psig (S1670–15000–25 only) Tolerance: ±2% fs	Same as above.
Temperature indication		
Bimetallic thermometer	Range: −40° to +160°F (S1670–15002–2 and 70700–77669–041) Tolerance: ±2°F	Calibrated in accordance with NAVAIR 17–20ST–02.

Figure 12. Example of Section 1 of a General Procedure

APPENDIX A

REPRESENTATIVE TEST INSTRUMENTS

A.1 TIs that can be calibrated using this procedure include, but are not limited to, the following:

Model	Manufacturer	Tolerance	Nomenclature
S1670–15000–25	Sikorsky Aircraft Div.	Abs. pressure gage; ±0.33% fs N2 ref. pressure gage: ±2% fs N2 cyl. pressure gage: ±2% fs	B.I.M. Blades Check and Fill Unit
S1670–15002–2	”	Abs. pressure gage: ±0.33% fs Bimetallic thermometer: ±2°F	”
70700–77669–041	”	Same as above	”

Figure 13. Example of Appendix A of a General Procedure

SECTION 3

PRELIMINARY OPERATIONS

3.1 If the TI is a psychrometer, remove the thermometers from their mountings.

3.2 Using a 10X or 20X microscope, inspect the TI for evidence of the following faults. If any of the faults exist, reject the TI.

Cracks or distortion in the glass or bore

Foreign matter in the liquid or in the bore, such as: glass chips, particles of dirt of lint, or oxide of mercury

3.3 Ensure that the TI is free of gas bubbles in the bulb or liquid stem, and there is no separation of the liquid in the expansion or contraction chamber of the stem; if necessary, take corrective action.

3.4 If a checklist is not provided for the TI, select two calibration points covering the range of the TI; one point should be within the lower third of the TI range, with the other point within the upper third of the TI range. If the TI range includes an ice point graduation (0°C to 32°F), this should be one of the points selected. The tests should be performed in the order of increasing temperatures.

3.5 Select the bath(s) required for the temperature range of the TI, open the overflow valve(s) and ensure that each bath is filled with the appropriate fluid to the overflow valve.

NOTE

The liquid level in the bath should be maintained at the point of overflow. If the bath temperature is lowered, add more fluid; if raised, allow the fluid to flow out of the overflow valve into a container that can withstand the heat of the fluid.

3.6 Mount the telescope and stand on the bath.

3.7 Ensure that each bath needed (except the ice–point bath) is set up as shown in Figure 1, but do not insert the thermometers at this time.

3.8 Turn on the power switch for each bath being used.

Figure 14. Example of Section 3 of a General Procedure

3.11 SYSTEM CALIBRATION PROCEDURES

System calibration procedures are developed to cover the calibration of certain test systems which are comprised of a number of components or building blocks. Such calibrations are typically performed on–site and/or in–place. The calibration approach may consist of individually calibrating each component or performing an overall system calibration. The approach utilized should assure that the system and/or system subassemblies are operating within prescribed specifications at the unit under–test (UUT) interface, and the effects of signal degradation resulting from system interconnection requirements are considered. The format and content of system calibration procedures may deviate from the conventional ICP in the following respects:

a. Section 1 (Introduction and Description) may contain additional descriptive information relating to the configuration of the system and the calibration approach utilized.

b. Section 3 (Preliminary Operations) may contain only the information generally applicable to the overall system. Preliminary operations peculiar to individual components are typically included immediately preceding the applicable test in Section 4.

c. Guidance may be included within Sections 3 or 4 relating to location of individual system components, access to and/or removal of system components, identification/location of TI adjustments and calibration controls, use of extender boards, and similar information.

3.12 ON–SITE AND/OR IN–PLACE CALIBRATION PROCEDURES

When dictated by logistic considerations, it is sometimes necessary to develop calibration procedures which perform TI calibrations on–site and/or in–place. The test methods and associated calibration equipment used in such procedures must also be appropriate for such application. On–site/in–place procedures may require special attention to equipment and operator safety. Since the calibrations are typically performed aboard ship, the calibration process must also meet applicable ship safety regulations. In addition, guidance may be required in the procedure relating to the identification, location and/or removal of the TI, TI orientation, TI and calibration equipment interconnections, and other information.

Since the performance specifications for shipboard installed instruments, such as panel meters and pressure gages, are typically derived from sources other than the manufacturer's specifications (i.e., Federal and Military specifications and standards), the appropriate source should be utilized for specifying test tolerances. The Metrology Requirements List (METRL), Section 1 provides guidance relating to calibration test tolerances applicable to various types of shipboard instruments and should be consulted.

3.13 PREPARATION OF ICP OUTLINE

Prior to the development of the draft ICP, an outline of the ICP should be prepared. The outline would then be reviewed by a functional area expert in the subject matter of the ICP, who would provide appropriate comments on the technical adequacy of the ICP being developed in the areas of standards and the methodology utilized. The outline itself would consist of the following information:

a. Test Instrument to be listed in the procedure.

b. Applicable performance parameters and tolerances as specified by the appropriate documentation.

c. Tests to be included in the ICP, related to the performance parameters and tolerances, listed in order of performance, with a brief but definitive description of each test.

d. Standards and other calibration equipment to be used.

The outline is intended to provide guidance to the ICP developer prior to development of the draft ICP so that the best possible ICP is produced.

4. CALIBRATION PROCEDURE REVIEW AND EVALUATION

4.1 SCOPE

This section provides guidelines for performing reviews and bench evaluations of ICP drafts to determine technical adequacy, functionality, and compliance with applicable requirements. Information regarding the manner of submitting completed ICP drafts to MSD for review and approval is also presented.

4.2 PERFORMANCE OF REVIEWS

Reviews should be performed by the procedure preparation activity prior to submission to the Naval Warfare Assessment Division, Measurement Science Directorate. Similar reviews of their own ICP drafts are routinely performed by MSD calibration procedure writers. Whenever practicable, the reviews should be performed in conjunction with ICP bench evaluations discussed in paragraph 4.4 following to assess the technical adequacy and functionality of the procedure prior to its publication and distribution.

4.3 REVIEW CHECKLIST

An ICP review checklist is provided in Appendix F to assist in performing the review. The checklist is keyed to each section of the ICP, provides a summary of applicable requirements, and references the guidelines paragraphs herein which pertain to the particular requirement.

4.4 BENCH EVALUATIONS

Bench evaluations should be performed whenever possible during procedure development and upon completion of the ICP. The availability of the TI and associated calibration equipment can facilitate procedure development, particularly when documentation for the TI is limited or inadequate. The performance of a bench evaluation will assist in assessing the technical adequacy and functionality of the procedure prior to its publication and distribution, and will assure that personnel and equipment safety matters have been adequately addressed. The need for bench evaluations will vary depending on the configuration and complexity of the TI and the calibration system and/or the adequacy of existing documentation. If possible, bench evaluations should be performed by a person and/or activity not involved in the ICP preparation to ensure an independent impartial review.

4.5 SUBMISSION OF ICP DRAFTS

4.5.1 **ICP Draft Submission Format**. ICP drafts are typically submitted to NWAD, Measurement Science Directorate, for review and approval in printed format. However, the processing of the drafts may be expedited if compatible word processing systems/software are utilized. Accordingly, documents may be submitted in NWAD compatible format on a diskette. Contact NWAD, Code MS 35 for information concerning compatible word processing systems and methods of submission.

4.5.2 **ICP Submission Checklist**. An ICP Submission Checklist, provided as Appendix H, is to be used when ICP drafts are submitted to NWAD.

APPENDIX A

EXAMPLE PROCEDURE NAVAIR 17–20ICP–000

TECHNICAL MANUAL

INSTRUMENT CALIBRATION PROCEDURE

INTERPHASE INTERPOLATOR

NG–397/U (AN/UGH–9)
SCHLECHT ELECTRONICS K–9

NOTE

THIS PUBLICATION WAS ASSEMBLED TO ILLUSTRATE FORMAT. DO NOT USE FOR INSTRUMENT CALIBRATION.

THIS PUBLICATION SUPERSEDES NAVAIR 17–20ICP–000
DATED 1 JUNE 1995
(EXAMPLE SUPERSEDURE NOTICE)

DISTRIBUTION STATEMENT C. DISTRIBUTION AUTHORIZED TO U.S. GOVERNMENT AGENCIES AND THEIR CONTRACTORS TO PROTECT PUBLICATIONS REQUIRED FOR OFFICIAL USE OR FOR ADMINISTRATIVE OR OPERATIONAL PURPOSES ONLY. OTHER REQUESTS FOR THIS DOCUMENT SHALL BE REFERRED TO NAVY MEASUREMENT SCIENCE DIRECTORATE, NAVAL WARFARE ASSESSMENT DIVISION, P.O. BOX 5000 CORONA, CA 91718–5000

DESTRUCTION NOTICE– FOR UNCLASSIFIED, LIMITED DOCUMENTS, DESTROY BY ANY METHOD THAT WILL PREVENT DISCLOSURE OF CONTENTS OR "RECONSTRUCTION OF THE DOCUMENT."

PUBLISHED BY DIRECTION OF COMMANDER NAVAL AIR SYSTEMS COMMAND

15 DECEMBER 1996

LIST OF EFFECTIVE PAGES

The purpose of this list is to identify the pages in this document affected by any technical content changes made since the previous release of the document.

NOTE: On a revised page, with the exception of the Title, the A, and the i pages, the technical changes are indicated by a vertical line in the outer margin of the page.

Page No.	Revision*	Page No.	Revision*	Page No.	Revision*
Title	0				
A	0				
i	0				
1 to 12	0				

* Zero in this column indicates an original page.
"R" in this column indicates a revised page.

A

TABLE OF CONTENTS

Section		Page
1	Introduction and Description	1
2	Equipment Requirements	2
3	Preliminary Operations	4
4	Calibration Process	4
4.1	Sensitivity Test	4
4.2	Sweep Width Tests	5
4.3	Frequency Response Tests	5
4.4	Differential Input Tests	7
4.5	Phase Shift Test	7
4.6	Triggering Sensitivity Test	7
4.7	Sweep Circuit Tests	7
4.8	Y Attenuator Compensation Tests	7
4.9	X Attenuator Compensation Tests	7
4.10	Y Amplifier Rise Time Tests	8
4.11	X Amplifier Rise Time Tests	8
	Navy Calibration Checklist	11

ILLUSTRATIONS

Figure		Page
1	X Attenuator Compensation Test Configuration	8
2	Y Amplifier Rise Time Displays	9

TABLES

Table		Page
1	Calibration Description	1
2	Equipment Requirements	2

This page left intentionally blank.

SECTION TITLES TO BE ALL CAPS

TEXT=10 PT TIMES OR TIMES NEW ROMAN

QUADRUPLE SPACE

DOUBLE SPACE

INDENT TWO SPACES

TRIPLE SPACE

SECTION 1

INTRODUCTION AND DESCRIPTION

1.1 This procedure describes the calibration of the Fairchild (DuMont Laboratories) 704 Oscilloscope referred to herein as the TI (Test Instrument).

DOUBLE SPACE

1.2 All comments concerning this procedure should be directed to Navy Measurement Science Directorate, Naval Warfare Assessment Division, P.O. Box 5000, Corona, CA 91718–5000.

1.3 This procedure includes tests of essential performance parameters only. Any malfunction noticed during calibration, whether specifically tested for or not, should be corrected.

CENTER ON PAGE. USE INITIAL CAPS ONLY

TRIPLE SPACE

USE INITIAL CAPS FOR COLUMN HEADS

Table 1. Calibration Description

TI Characteristics	Performance Specifications	Test Method
Line voltage regulation	The manufacturer implies that satisfactory operation within all stated tolerances is obtainable with line voltages from 105 to 125 volts	The internal calibrator waveform is observed on the TI CRT at 105 and 125 volts.
Voltage ca	Square–wave output locked to power–line frequency. P–P voltage output is 0.5 V ±3%.	An accurate ac source output is compared to the voltage calibrator output on the TI CRT.
Horizontal and vertical amplifier sensitivity	The amplifiers have ranges of input sensitivity in a 1, 2, 5, 10 sequence, providing deflection factors of 0.2 mV/cm to 20V cm. Tolerance: ±3%	wn amplitude are on the CRT, and the resulting deflection measured.
Differential input	The CRT displays the difference between A and B input channels	The X and Y amplifier differential inputs are verified by applying accurate ac source inputs to the A and B channels and observing the CRT waveform amplitude.

INDENT ADDITIONAL LINES OF AN ENTRY ONE SPACE

DOUBLE SPACE BETWEEN ENTRIES

ESTABLISH COLUMN SPACING FOR BEST DISTRIBUTION OF MATERIAL

NOTE THAT THE TABLE IS LEFT OPEN INDICATING THAT IT IS NOT COMPLETE

PLACE PAGE NUMBERS IN THE LOWER OUTER CORNER OF COPY SPACE. USE ODD NUMBERS FOR RIGHT HAND PAGES

TRIPLE SPACE

TI Characteristics	Performance Specifications	Test Method
Resistance measurements	Ranges: 2, 20, 200 and 2000 kΩ Tolerance: ±(0.6% iv ± 0.15% fs)	Known resistance values are applied and compared with the TI indications.

1.4 Sweep length is tested by inference during all sections of this procedure by observation of the TI CRT display.

NOTES ARE TO BE BLOCK STYLE INDENTED FIVE SPACES ON THE LEFT AND APPROXIMATELY FIVE SPACES ON THE RIGHT

SECTION 2

EQUIPMENT REQUIREMENTS

TRIPLE SPACE

DOUBLE SPACE

NOTE

Minimum use specifications are the principal parameters required for performance of the calibration, and are included to assist in the selection of alternate equipment, which may be used at the discretion of the using laboratory. Satisfactory performance of alternate items shall be verified prior to use. All applicable equipment must bear evidence of current calibration.

The instruments utilized in this procedure were selected from those known to be available at Navy calibration facilities, and the listing by make or model number carries no implication of preference, recommendation, or approval for use by other agencies. It is recognized that equivalent equipment produced by other manufacturers may be capable of equally satisfactory performance in this procedure.

TRIPLE SPACE

Table 2. Equipment Requirements

Item	Minimum Use Specifications	Calibration Equipment
2.1 Time mark generator	Markers from 0.5 s to 0.2 s in a 1, 2, 5 sequence Uncertainty: ±0.5% Trigger outputs from 1 s to 1 s	Tektronix TG501A
2.2 Feedthrough termination	50 Ω ±5%, 1 W noninductive	Tektronix 011–0099–00 or 011–0049–01

Item	Minimum Use Specifications	Calibration Equipment
2.3 Calibration generator	No substitute	Tektronix PG506 in a TM503
2.4 Attenuator	Range: 0 to 30 dB in 10 dB steps Impedance: 50 Ω	Hewlett–Packard 355DOPT001
2.5 Oscilloscope (differential comparator)	DC output: 0 to 1 V	Tektronix TSD620A
2.6 Probe	TI accessory or compatible for use with the TI Ratio: 10:1 Capacitance: 47 pF nominal	Submit with TI
2.7 Digital multimeter (DMM)	Range: 0 to 1.00 V dc Uncertainty: ±0.25%	Fluke 34401A
2.8 Meter calibrator	V dc output: Range: 1.9 to 1100 V Uncertainty: ±0.025% iv V ac output: Range: 1.9 to 700 V Uncertainty: ±0.125% iv from 50 to 500 Hz Resistance: Range: 100 Ω to 1 MΩ in decade steps Uncertainty: ±0.15%	Fluke 5700AAN

BOTTOM CLOSURE LINE INDICATES THAT THE TABLE IS COMPLETE

SECTION 3

PRELIMINARY OPERATIONS

3.1 Ensure that all power switches are set to off, and set all auxiliary equipment controls as necessary to avoid damage to the equipment and so that dangerous voltages will not be present on output terminals when the power switches are turned on.

3.2 Connect the auxiliary equipment to the appropriate power source.

3.3 Connect the TI power cord to the autotransformer output, and adjust the autotransformer control for 115 volts output.

3.4 Turn all power switches on, and allow a sufficient warm up time for the equipment (the TI requires 30 minutes to warm up).

QUINTUPLE SPACE

SECTION 4

TWO–DIGIT TITLES TO BE ALL CAPS (ALL TITLES OF THREE OR MORE DIGITS USE INITIAL CAPS ONLY)

CALIBRATION PROCESS

TRIPLE SPACE

NOTE

Unless otherwise specified, verify the results of each test and take corrective action whenever the test requirement is not met, before proceeding.

4.1 SENSITIVITY TEST

DOUBLE SPACE

4.1.1 Set the TI controls as follows:

INPUT CHANNEL switch to	1
MKR switch to	up position
GAIN switch to	fully cw
KC SWEEP WIDTH switch to	2000

4.12 Adjust the TI CTR FREQ control to position the marker directly under the center vertical graticule line on the TI CRT.

4.13 Set the TI MKR switch the down position.

4.14 Connect the 50 Ω termination to the signal generator output.

4.1.5 Connect the TI channel 1 input to the signal generator output connector.

4.1.6 Set the signal generator controls for 21.4 M

ALIGN LEFT EDGE OF TABULATED DATA WITH START OF FIRST LINE OF TEST

0 microvolts.

4

4.1.7 Adjust the signal generator frequency controls to position the pulse display to coincide with the TI center vertical graticule line.

4.1.8 Adjust the signal generator output level control for an exact 1–inch deflection on the TI CRT.

4.1.9 Verify that the signal generator output level is 10 microvolts or less.

4.1.10 Adjust the signal generator controls for minimum output voltage.

* * * * * *

4.2.10 Verify that the test oscillator frequency is between 24.5 and 25.5 kHz.

4.2.11 Set the TI KC SWEEP WIDTH switch to the following listed positions. At each setting, set the test oscillator controls for the corresponding frequency, repeat steps 4.2.9 and 4.2.10, and verify that the test oscillator frequency is within the tolerances listed.

NOTE

TI GAIN, the test oscillator, and the signal generator amplitude TRIPLE SPACE sary:

TI KC SWEEP WIDTH Switch	Test Oscillator	Tolerance Limits
100	50 kHz	49.0 to 51.0 kHz
500	250	245.0 to 255.0 ”
1000	500	490.0 to 510.0 ”
2000	1000	980.0 to 1020.0 ”

4.2.12 Disconnect the test setup.

4.3 FREQUENCY RESPONSE TESTS

4.3.1 Set the TI controls as follows:

INPUT CHANNEL switch to	1
MKR switch to	up position
GAIN control to	midrange
KC SWEEP WIDTH switch to	2000

4.3.2 Adjust the TI FREQ control to position the marker under the center vertical graticule line on the TI CRT.

4.3.3 Set the TI MKR switch to the down position.

4.3.4 Set the signal generator controls for 21.4 MHz and minimum output.

4.3.5 Connect the signal generator output to the channel 1 input.

4.3.6 Adjust the signal generator output level to produce a 0.5–inch deflection on the TI CRT.

* * * * * *

4.5.4 Set the TI Y VOLTS/CM switch to the following listed positions. At each setting, adjust the ratio transformer to the settings listed. Adjust the voltage divider to obtain exactly 10 cm of vertical CRT deflection at the 0.2 MV/CM setting, 8 cm at the 0.5 MV/CM setting, and 5 cm at the other settings. Verify that the voltage divider indicates within the limits listed.

TI Y VOLTS/CM Switch Setting	Ratio Transformer Settings	Voltage Divider Indication Limits
.2 MV	0.01000	0.0194 to 0.206
.5 ”	”	0.0388 to 0.0412
1 ”	”	0.0485 to 0.0515
2 ”	”	0.0970 to 0.1030
5 ”	”	0.2425 to 0.2575
10 ”	0.1000	0.0485 to 0.0515
20 ”	”	0.0970 to 0.1030
50 ”	”	0.2425 to 0.2575

4.5.5 Adjust the ACV source controls for minimum output voltage.

4.5.6 Discount the voltage divider from the TI and from the ratio transformer output terminals.

4.5.7 Connect the ratio transformer output terminals to the TI Y INPUT A connector with coaxial cable.

4.5.8 Set the TI Y VOLTS/CM switch to the following listed positions. At each setting, adjust the ACV source output to the voltages listed. Adjust the ratio transformer to obtain exactly 4 cm of vertical CRT deflection at the 20 VOLTS/CM setting and 5 cm at other settings. Verify that the ratio transformer indicates within the limits listed.

TI Y VOLTS/CM Switch Setting	ACV Source Output Voltage	Ratio Transformer Indication Limits
.1	3.535 V	0.0485 to 0.0515
.2	”	0.0970 to 0.1030
.5	”	0.2425 to 0.2575
1	35.353 V	0.0485 to 0.0515
2	”	0.0970 to 0.1030
5	”	0.2425 to 0.2575
10	”	0.485 to 0.515
20	”	0.776 to 0.824

4.5.9 Adjust the ACV source controls for minimum output voltage.

4.5.10 Disconnect the ratio transformer output terminals from the TI.

4.5.11 Set the TI X selector switch to AC A.

* * * * *

4.8.7 Verify that the TI CRT display is properly compensated. See Figure 1.

4.8.8 Set the TI Y selector switch to AC–B.

4.8.9 Disconnect the pulse generator output (or square–wave generator output) from the TI Y INPUT A connector, and connect it to the Y INPUT B connector.

NOTE

The displayed pulse will be reversed in polarity from the previous CRT display.

4.8.10 Set the TI Y VOLT/CM switch to 0.5 VOLT/CM.

4.8.11 Repeat steps 4.8.3 through 4.8.7.

4.8.12 Disconnect the pulse generator (or square–wave generator) from the TI.

4.9 X ATTENUATOR COMPENSATION TESTS

NOTE

The following tests can be performed with either the pulse generator or the square–wave generator.

4.9.1 Connect all applicable equipment as shown in Figure 1.

4.9.2 Set the TI controls as indicated below:

Y VOLTS/CM switch to	20 VOLTS/CM
Y selector switch to	DC A
TIME/CM switch to	OFF
X VOLTS/CM switch to	0.5 VOLTS/CM
X Selector switch to	DC A

* * * * *

NAVAIR 17–20ICP–000

TRIPLE SPACE

4.10.2 This step is typed here in order to illustrate the correct spacing between this step, the procedure number (above), and the figure (below). Leave a triple space between the procedure number and running text; quadruple space if a section heading starts the page.

ALLOW SPACE FOR FIGURE PLUS ONE HALF INCH ABOVE AND BELOW

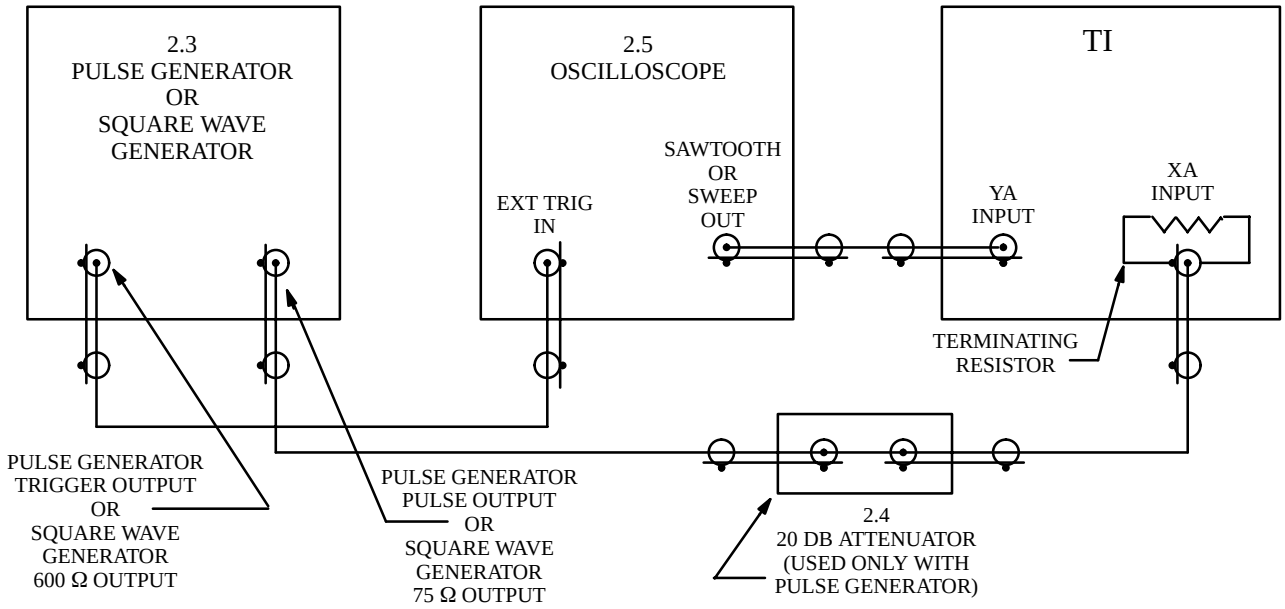

Figure 1. X Attenuator Compensation Test Configuration

TRIPLE SPACE

NOTES

1. If the pulse generator is being used, connect the 20 dB attenuator between the pulse output and the TI. Adjust the pulse generator controls for a repetition rate of approximately 4000 pps, the pulse width control for a width of 5 ms, and adjust the delay and amplitude controls for a stable TI CRT display 10 cm in amplitude.

2. If the square–wave generator is being used, adjust the frequency control to approximately 20 kHz, and adjust the 75 Ω amplitude control for a TI CRT display 10 cm in amplitude.

TRIPLE SPACE

4.10.3 Set the TI X VOLTS/CM switch to 5 (green marking).

4.10.4 Position the presentation as shown in Figure 2, and verify that the Y amplifier rise time between the 10% and 90% amplitude points is 0.8 ms (0.8 cm) or less.

4.10.5 Verify that the waveform does not have more than 0.5 cm overshoot.

4.10.6 Unless other measurements are to be performed, turn all power switches to off or standby, and disconnect the TI.

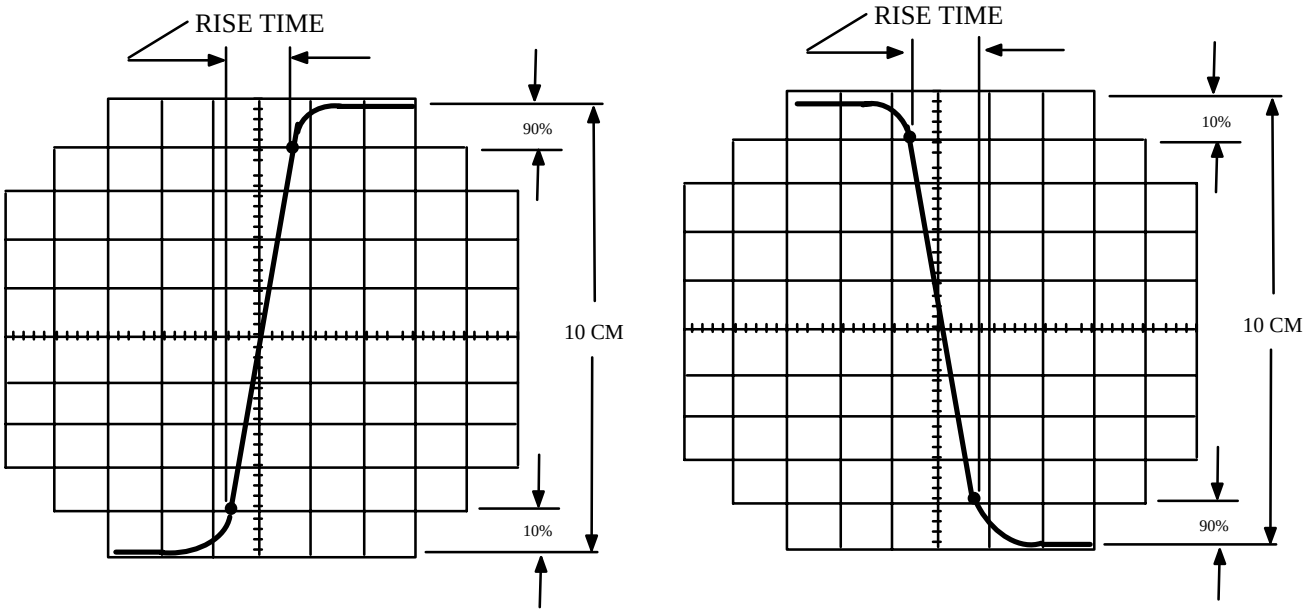

a. Positive Pulse Input Display

b. Negative Pulse or Square Wave Display

Figure 2. Y Amplifier Rise Time Displays

This page intentionally left blank.

ALWAYS START CHECKLISTS ON AN ODD NUMBERED PAGE

CALIBRATION CHECKLIST

TEST INST (S) NG–397/U (NA/UGH–9) or Schlecht Electronics K–9 Interphase Interpolator

PROC. NO. NA 17–20ICP–000 MFG. MODEL SER. NO.

PROCEDURE STEP NO. (1)	FUNCTION TESTED (2)	NOMINAL (3)	MEASURED VALUES FIRST RUN (4)	MEASURED VALUES SECOND RUN (5)	OUT OF TOL (6)	CALIBRATION TOLERANCES (7)
4.1.9	Sensitivity	––	ck ( )			10 µV or less
4.2	Sweep Width Test					
	TI Test OSC	(kHz)				(kHz)
4.2.10	50 kHz 25 kHz	25				24.50 to 25.50
4.2.11	100 ” 50 ”	50				49.00 to 51.00
”	500 ” 250 ”	250				245.0 to 255.0
”	1000 ” 1000 ”	500				490.0 to 510.0
”	2000 ” 1000 ”	1000				980.0 to 1020.0
4.3	Frequency Response Tests					
4.3.4	Y VOLTS/CM					
”	0.2 mV (10 cm)	0.0200				0.0194 to 0.0206
”	0.5 mV (8 cm)	0.0400				0.0388 to 0.0412
”	1 mV (5 cm)	0.0500				0.0485 to 0.0515
”	2 mV ”	0.1000				0.0970 to 0.1030
”	5 mV ”	0.2500				0.2425 to 0.2575
”	10 mV ”	0.0500				0.0485 to 0.0515
”	20 mV ”	0.1000				0.0970 to 0.1030
”	50 mV ”	0.2500				0.2425 to 0.2575
4.3.8	0.1 V ”	0.5000				0.485 to 0.0515
”	0.2 V ”	0.1000				0.0970 to 0.1030
”	0.5 V ”	0.2500				0.2425 to 0.2575
”	1 V ”	0.5000				0.0485 to 0.0515
”	2 V ”	0.1000				0.0970 to 0.1030
”	5 V ”	0.2500				0.2425 to 0.2575

Page 1 of 2

11

NAVAIR 17–20ICP–000

ALWAYS START CHECKLISTS ON AN ODD NUMBERED PAGE

CALIBRATION CHECKLIST

TEST INST (S) NG–397/U (NA/UGH–9) or Schlecht Electronics K–9 Interphase Interpolator

PROC. NO. NA 17–20ICP–000 MFG. MODEL SER. NO.

PROCEDURE STEP NO. (1)	FUNCTION TESTED (2)	NOMINAL (3)	MEASURED VALUES FIRST RUN (4)	MEASURED VALUES SECOND RUN (5)	OUT OF TOL (6)	CALIBRATION TOLERANCES (7)
4.3.8	10 V	0.500				0.485 to 0.515
	20 V (4 cm)	0.800				0.776 to 0.824
4.8	Y Attenuator Compensation Test					
4.8.7	A channel	––	ck ( )		NA	correctly compensated
4.8.11	B channel	––	ck ( )		NA	correctly compensated
4.10	Y Amplifier Rise Time Tests					
4.10.4	Rise Time	––	ck ( )			0.8 µs (0.8 cm) max
4.10.5	Overshoot	––	ck ( )			0.5 cm max

Page 2 of 2

12

APPENDIX B

MULTIPLES OF SI UNITS

Prefix	Factor	Symbol
Tera	10^{12}	T
Giga	10^{9}	G
Mega	10^{6}	M
Kilo	10^{3}	k
Hecto	10^{2}	h
Deka	10^{1}	da
Deci	10^{-1}	d
Centi	10^{-2}	c
Milli	10^{-3}	m
Micro	10^{-6}	μ
Nano	10^{-9}	n
Pico	10^{-12}	p

APPENDIX C

AUTHORIZED ABBREVIATIONS

NOTE

The terms and abbreviations listed in this Appendix are authorized for use in Navy calibration procedures and include, but are not limited to, excerpts from MIL–STD–12D. (Abbreviations for Use on Drawings, and in Specifications, Standards and Technical Documents). The listings include columns entitled LC (lower case) and CAPS (capitalized). Abbreviations in the LC column provide the form required for document text produced in lower case characters; however, these abbreviations may be capitalized when required for special emphasis. Abbreviations in the CAPS column provide the form for document text produced in upper case characters.

Term	LC	CAPS
Absolute	abs	ABS
Acceleration due to gravity	g	g
Acceleration in g. units	G	G
Acceleration, standard	g.	G.
Actual cubic feet per minute	ACFM	ACFM
Adjustable, adjustment	adj	ADJ
Alternating current	ac	AC
Alternating voltage	V ac	V AC
Ampere(s)	A	A
Ampere–hour	Ah	Ah
Amplitude modulation	AM	AM
Angstrom	A	A
Approximate(ly)	approx.	APPROX.
Atmosphere	atm	ATM
Attenuator	atten	ATTEN
Audio frequency	AF	AF
Average	avg	AVG

AUTHORIZED ABBREVIATIONS (Continued)

Term	LC	CAPS
British thermal unit	Btu	Btu
Candela	cd	CD
Capacitor	cap.	CAP.
Cathode–ray tube	CRT	CRT
Centimeter	cm	CM
Centimeter(s) per second	cm/s	CM/s
Clockwise	cw	CW*
Coaxial	coax.	COAX.
Continuous wave	CW	CW
Coulomb	C	C
Counterclockwise	ccw	CCW
Crystal	xtal	XTAL
Cubic centimeter	cm^3	cm^3
Cubic foot	ft^3	FT^3
Cubic foot per minute	ft^3/min	FT^3/MIN
Cubic foot per second	ft^3/s	FT^3/s
Cubic inch	in^3	IN^3
Cubic meter	m^3	m^3
Cubic meter per second	m^3/s	m^3/s
Decibel	dB	DB
Decibel(s) below carrier	dBc	DBC
Decibel(s) referred to 1 mW	dBm	DBM
Degree	deg	DEG
Degrees Baume	°Be′	°Be′
Degrees Celcius (Centigrade)	°C	°C

*Spell out if any possibility of confusion with “continuous wave”.

AUTHORIZED ABBREVIATIONS (Continued)

Term	LC	CAPS
Degrees Fahrenheit	°F	°F
Degrees Kelvin	K	K
Diameter	dia	DIA
Differential voltmeter	diff vm	DIFF VM
Digital multimeter	DMM	DMM
Digital voltmeter	DVM	DVM
Direct current	dc	DC
Direct voltage	V dc	V DC
Divide, Division	div	DIV
Double–pole, double–throw	dpdt	DPDT
double–pole, single–throw	dpst	DPST
Dyne	dyn	dyn
Electronvolt	eV	eV
Electronic counter	counter	COUNTER
Electronic voltmeter	EVM	EVM
Farad	F	F
Foot (feet)	ft	FT
For example (exempli gratia)	e.g.	e.g.
Feet per second	ft/s	FT/s
Footcandle	fc	FC
Footlambert	fL	fL
Foot (feet) per minute	ft/min	FT/MIN
Foot (feet) per second	ft/s	FT/s
Foot poundal	ft.pdl	FT.PDL
Foot pound–force	ft.lbf	FT.LBF
Frequency	freq	FREQ

AUTHORIZED ABBREVIATIONS (Continued)

Term	LC	CAPS
Frequency modulation	FM	FM
Fullscale	fs	FS
Gal	gal	GAL
Gallon	gal	GAL
Gallons per minute	gal/min	GALA/MIN
Galvanometer	galvo	GALVO
Gauss	G	G
Generator	gen	GEN
Gigal	G	G
Gilbert	G	G
Grain	gr	GR
Gram	g	G
Ground	gnd	GND
Henry	H	H
Hertz (cycles per second)	Hz	Hz
Horizontal	horiz	HORIZ
Horsepower	hp	HP
Hour	hr	HR
Inch	in.	IN.
Inches of Mercury	in Hg	(Avoid All CAPS)
Inches per second	in/s	IN/S
Indicated value	iv	IV
Inside diameter	ID	ID
Instrument	inst	INST
Intermediate frequency	IF	IF
Joule	J	J

AUTHORIZED ABBREVIATIONS (Continued)

Term	LC	CAPS
Kelvin	K	K
Lambert	L	L
Liter	l	L
Liter per second	l/s	L/s
Local oscillator	L.O.	L.O.
Low pass	lp	LP
Lumen	lm	LM
Lumen per watt	lm/W	LM/W
Lumen second	lm.s	LM.s
Maximum	max.	MAX.
Maxwell	Mx	Mx
Meter (length)	m	M
Micro–	Ω	Ω
Mil	mil	MIL
Mile	mi	MI
Mile per hour	mph	MPH
Milliammeter	mam	MAM
Minimum	min.	MIN.
Minute (plane angle)	/	/
Minute (time)	min	MIN
Modulate, –ed, –or	mod	MOD
Negative	neg	NEG
Neper	Np	Np
Newton	N	N
Newton meter	N.m	N.m
Newton per square meter	N/m^2	N/m^2

AUTHORIZED ABBREVIATIONS (Continued)

Term	LC	CAPS
Nominal	nom.	NOM.
Not applicable	na	NA
Oersted	Oe	Oe
Ohm	Ω	Ω
Oscillator	osc	OSC
Oscilloscope	scope	SCOPE
Ounce	oz	OZ
Outside diameter	OD	OD
Parts per million	ppm	PPM
Peak–to–peak	p–p	P–P
Pint	pt	PT
Pound(s)	Lb	LB
Poundal	pdl	PDL
Pound force	lbf	LBF
Pound–force foot	lbf.ft	LBF.FT
Pounds per square inch	psi	PSI
Pounds per square inch gage	psig	PSIG
Pounds per Square inch absolute	psia	PSIA
Pounds per square inch differential	psid	PSID
Preamplifier	preamp	PREAMP
Pules repetition frequency	prf	PRF
Pulses per second	pps	PPS
Quart	qt	QT
Rad	rd	RD
Radian	rad	RAD
Radio frequency	RF	RF

AUTHORIZED ABBREVIATIONS (Continued)

Term	LC	CAPS
Receiver	RCVR	RCVR
Regulate, –or	reg	REG
Rem	rem	REM
Revolution(s) per minute	rpm	RPM
Revolution per second	rps	RPS
Roentgen	R	R
Root mean square	rms	RMS
Root sum of squares	rss	RSS
Second (plane angle)	”	”
Second (time)	s	s
Siemens (s = Ω – 1)	S	S
Signal generator	sig gen	SIG GEN
Single–pole double–throw	spdt	SPDT
Single–pole single–throw	spst	SPST
Specific gravity	sp.gr.	SP.GR.
Square centimeter	cm^2	CM^2
Square foot	ft^2	FT^2
Stabilized local oscillator	STALO	STALO
Standard	std	STD
Standard cubic feet per minute	SCFM	SCFM
Steradian	sr	SR
Switch	sw	SW
Square inch	in^2	IN^2
Square meter	m^2	M^2
Synchronize, er, –ing	sync	SYNC
Temperature	temp	TEMP

AUTHORIZED ABBREVIATIONS (Continued)

Term	LC	CAPS
Tesla	T	T
Test Instrument	TI	TI
That is (id est)	i.e.	i.e.
Tonne	t	T
Torque	lb–ft	–LBFT
Transformer	xmfr	XMFR
Vacu–umtube voltmeter	vtvm	VTVM
Vertical	vert	VERT
Volt(s)	V	V
Voltampere	VA	VA
Voltage Standing Wave Ratio	VSWR	VSWR
Voltmeter	VM	VM
Vo–lto–hmmilliammeter	VOM	VOM
Watt	W	W
Watthour	Wh	Wh
Watt per steradian	W/sr	W/sr
Watt per steradan square meter	$w/sr.m^2$	$W/Sr.m^2$
Weber	wb	Wb
Weight	wt	WT
Working voltage dc	wvdc	WVDC
Yard	yd	YD

APPENDIX D

REFERENCE DOCUMENTS

NOTE

The publications listed below are referenced in this document and/or are directly applicable to the material presented herein. Additional publications, including applicable METCAL program instructions and directives are listed in the Metrology Requirements List (METRL). Unless otherwise indicated, the current issue of each document applies.

NAVAIR 17–35MTL–1, NAVSEA OD 45845, USMC TI–4733–15/13, Metrology Requirements List (METRL)

NAVAIR 17–35NCE–1, NAVSEA OD 48939, USMC TI–4733–45/16, Navy Calibration Equipment List (NCE)

NAVAIR 17–35GNC–1, Generic Name and Coding System (GNC) for Test and Monitoring Systems

NAVAIR 17–35 TR–1, NAVSEA TT700–AA–CAL–010/TR–1, OD56732 (SSPO), USMC TI–4733–45/13, Technical Requirements for Calibration of Test and Monitoring Systems (TAMS)

MIL–STD–38793 Manuals, Technical: Calibration Procedures, Preparation of

MIL–STD–38784 Manuals, Technical: General Requirements for Preparation of

ANSI/IEEE STD 100, Standard Dictionary of Electrical and Electronic Terms (American National Standards Institute)

ISO 1000 (E), SI units and recommendations for the use of their multiples and of certain other units (International Standards Organization)

MIL–STD–12, Abbreviations for use on drawings, specifications, standards and in technical documents

MIL–HDBK–63038–1 (TM) – Technical Manual Writing Handbook

MIL–HDBK–63038–2 (TM) – Technical Writing Style Guide

OPNAVINST 5100.23 Navy Occupational Safety and Health (NAVOSH) Program Manual

APPENDIX E

ICP BOILER PLATE FORMS

SECTION 1

INTRODUCTION AND DESCRIPTION

1.1 This procedure describes the calibration of _____. The instrument being calibrated is referred to herein as the TI (Test Instrument).

1.2 All comments concerning this procedure should be directed to Navy Measurement Science Directorate, Naval Warfare Assessment Division, P.O. Box 5000, Corona, CA 91718–5000.

1.3 This procedure includes tests of essential performance parameters only. Any malfunction noticed during calibration, whether specifically tested for or not, should be corrected.

Table 1. Calibration Description

TI Characteristics	Performance Specifications	Test Method

SECTION 2

EQUIPMENT REQUIREMENTS

NOTE

Minimum use specifications are the principal parameters required for performance of the calibration, and are included to assist in the selection of alternate equipment, which may be used at the discretion of the using laboratory. Satisfactory performance of alternate items shall be verified prior to use. All applicable equipment must bear evidence of current calibration.

The instruments utilized in this procedure were selected from those known to be available at Navy calibration facilities, and the listing by make or model number carries no implication of preference, recommendation, or approval for use by other agencies. It is recognized that equivalent equipment produced by other manufacturers may be capable of equally satisfactory performance in this procedure.

Table 2. Equipment Requirements

Item	Minimum Use Specifications	Calibration Equipment

SECTION 3

PRELIMINARY OPERATIONS
(ELECTRICAL/ELECTRONIC EQUIPMENT)

3.1 Ensure that all power switches are set to off, and set all auxiliary equipment controls as necessary to avoid damage to the equipment and so that dangerous voltages will not be present on output terminals when the power switches are turned on.

3.2 Connect the auxiliary equipment, and the TI, to the appropriate power source.

3.x _____

_____

3.x Turn all power switches on, and allow a sufficient warm up time for the equipment (the TI requires _____ minutes warm up time).

_____

_____

_____

_____

_____

_____

_____

_____

_____

_____

_____

_____

_____

_____

_____

_____

_____

SECTION 3

PRELIMINARY OPERATIONS
(MECHANICAL EQUIPMENT)

3.1 Ensure that all power switches are set to off, and set all auxiliary equipment controls as necessary to avoid damage to the equipment and so that dangerous voltages will not be present on output terminals when the power switches are turned on.

3.2 Ensure that the TI is clean and free of any defect that would impair its operation.

SECTION 4

CALIBRATION PROCESS

NOTE

Unless otherwise specified, verify the results of each test and take corrective action whenever the test requirement is not met, before proceeding.

4.1

4.1.1 Set the TI controls as follows:

4.__.__ Unless other measurements are to be performed, turn all power switches to off or standby, and disconnect the equipment from the TI.

APPENDIX F

ICP REVIEW CHECKLIST

ICP NO: _____

TITLE: _____

ICP DATE: _____

ICP SECTION/ PARAGRAPH NO.	TR–4 PARA	REQUIREMENT	REVIEW RESULTS AND/OR COMMENTS
ICP Outline	3.13	Outline of ICP prepared.	
Front Matter	3.3	Proper identification of military and/or commercial mfg part no.; table of contents and "A" page properly completed.	
Section 1	3.4	Introduction and Description	
Paragraph 1	3.4.2	TI properly identified.	
	3.4.3 3.10.1	Required introductory info included. Section 1 refers to Appendix A for General ICP.	
Table 1	3.4.4.1	All required performance parameters are tested in accordance with valid test requirements criteria. CRD utilized if available.	
	3.4.4.2	Test tolerances are derived from valid references (mfg specs, federal or MIL–specs, CMRS, weapon system use requirements, etc.); no test tolerances are missing.	
	3.4.4.3.1	Test methods adequate to verify each parameter and compatible with NCE and/or cal equipment available at supporting labs.	
	3.4.4.3.2	Test methods result in TAR of four to one or better for each parameter tested. Deviations annotated with footnote.	
	3.4.4.3.3 3.4.4.3.4	Test methods utilize overall (black box) testing techniques. Tests sequenced for efficiency, minimum retesting, to minimize effects of interaction and arranged in logical groupings.	

ICP SECTION/ PARAGRAPH NO.	TR–4 PARA	REQUIREMENT	REVIEW RESULTS AND/OR COMMENTS
	3.4.5.1	Statement of where ICP was derived included if ICP prepared by an activity external to NWAD.	
	3.4.5.2	Table 1 data properly identified.	
	3.4.5.2c	Performance parameters not tested or NCR items are listed and annotated “not tested” or NCR.	
	3.10.2	Performance specifiations listed in Section 1, Table 1 of General ICP refer to Appendix A for applicable TI tolerances.	
Section 2	3.5	Preparation of Section 2 (Equipment Requirements)	
	3.5.2	All equipment required for the calibration is listed by generic name, quantity (if more than one is required), minimum use specifications and manufacturer and model number.	
	3.5.2.2	Minimum use specifications are based on minimum test requirements and not manufacturer’s specs.	
	3.5.2.3	First item listed is NCE “standard”.	
	3.5.2.3	Additional NCE substitute items are listed if available. (“No Substitute” avoided unless absolutely necessary).	
	3.5.2.2/ 3.5.2.3	Equipment selected results in TAR of 4:1 or better.	
	3.5.2.4	Required accessories (adapters, special cables, etc.) are listed with their salient characteristics and/or source of supply.	
Section 3	3.6	Preliminary Operations	
	3.6.1	TI and cal equipment connections, warm up instructions, visual inspection, setup instructions, etc., included as applicable.	
	3.6.2	Equipment and operator hazards or special conditions are identified by warnings and cautions, and notes.	

ICP SECTION/ PARAGRAPH NO.	TR–4 PARA	REQUIREMENT	REVIEW RESULTS AND/OR COMMENTS
	3.6.3	Special environmental conditions for calibration equipment identified.	
	3.6.4	Required preliminary checks and inspections and functional checks performed.	
	3.6.5	TI controls and control settings properly identified.	
	3.6.6	Interconnection information properly identified.	
	3.10.3	Controls and control settings described in general terms for General ICP.	
	3.10.4	Checklist preparation instructions included if applicable (General ICPs).	
Section 4	3.7	Calibration Process	
	3.7.2.1	Instructions are sufficiently clear and unambiguous. Length and content of each step covers a complete operation.	
	3.7.2.2	Calibration process divided into well defined segments that cover each general calibration area.	
	3.7.2.2	Tests sequenced for efficiency and to minimize changes in connections, control settings, etc. Sequence corresponds with Table 1.	
	3.7.2.3	Test methods utilize overall performance (black box) techniques.	
	3.7.2.3	Test methods meet TAR requirements.	
	3.7.2.4	Diagrams, figures and sample calculations provided where necessary and are consistent with text.	
	3.7.2.5/ 3.6.5	TI controls and control settings properly identified and given in specific terms for TI but in generic terms for cal equipment.	
	3.7.2.6/ 3.6.6	Interconnection instructions provided where necessary.	
	3.7.2.7/ 3.6.2	Equipment and operator hazards or special conditions are identified by warnings and cautions at appropriate location in procedure.	

ICP SECTION/ PARAGRAPH NO.	TR–4 PARA	REQUIREMENT	REVIEW RESULTS AND/OR COMMENTS
	3.7.2.8	Need for adjustments meet prescribed criteria and conditions.	
	3.7.2.8	Adjustments performed after out–of–tolerance conditions documented.	
	3.7.2.8	Applicable to all instruments covered by procedure and consider interactions.	
	3.7.2.9	Verification of calibration results and corrective actions associated with a procedure step included at the beginning of Section 4.	
	3.7.2.10	Proper calibration test points chosen.	
	3.7.2.11	Plus/minus percentage tolerances expressed in terms of measured value units and included as upper and lower limits versus plus or minus a percentage.	
	3.7.2.11	Positive and negative signs for tolerance limits properly identified.	
	3.7.2.11	Single limit tolerances expressed in terms of measured value units as a single minimum or maximum value.	
	3.7.3.1	Report–of–Calibrations/Correction Chart instructions identified as required.	
	3.10.3	Controls and control settings described in general terms for General ICP.	
Calibration/ Checklist	3.8	Preparation of checklist.	
	3.8.2	Step numbers consistent with corresponding steps of Sections 3 and 4 and all applicable steps included.	
	3.8.2	“Function Tested” entries for Column (2) consistent with Section 3 or 4 titles or appropriately descriptive.	
	3.8.2	Nominal values (Column 3) and calibration tolerances (Column 7) consistent with Section 4 steps.	

ICP SECTION/ PARAGRAPH NO.	TR–4 PARA	REQUIREMENT	REVIEW RESULTS AND/OR COMMENTS
	3.8.2	"Check" or "verify" items have "ck" entry in column (4).	
	3.8.2	"NA" entered in Column (6) for functional or operational checks.	
	3.8.2	Ditto marks used as needed to avoid redundancy.	
Appendix	3.9	Appendices	
	3.9	Appendix A provided for supplementary information to sections 3 and 4 as required.	
	3.9 4.4	Appendix A for General ICP included. Bench Evaluations	 Performed:
			Yes_____ No_____ Performed by: _____

Additional Comments:

Prepared by: _____

Activity: _____

Date: _____

APPENDIX G

ACRONYMS AND ABBREVIATIONS

AFTO	Air Force Technical Order
ANSI	American National Standards Institute
ATE	Automatic Test Equipment
CAPS	Capitals (Capital Letters)
CMRS	Calibration Measurement Requirements Summary
CRA	Calibration Requirements Analysis
CRD	Calibration Requirements Document
DLA	Defense Logistics Agency
DOD	Department of Defense
DVM	Digital VoltMeter
EJ	Equipment Jacket
FCA	Field Calibration Activity
GIDEP	Government–Industry Data Exchange Program
GNC	Generic Name and Coding System
GPIB	General Purpose Instrument Bus (IEEE–488)
GPTE	General Purpose Test Equipment
HMIS	Hazardous Material Information System
ICP	Instrument Calibration Procedure
IEEE	Institute of Electrical and Electronic Engineers
ISO	International Standards Organization
LC	Lower Case
LCP	Local Calibration Procedure
METCAL	Metrology and Calibration
METRL	Metrology Requirements List NA 17–35MTL–1
MMM	Measurement Method Module
MS	Measurement Science
MSD	Measurement Science Directorate
MSOP	Measurement System Operation Procedure
NA	Not Applicable
NAVAIR	Naval Air Systems Command (NAVAIRSYSCOM)
NAVOSH	Navy Occupational Safety and Health
NIST	National Institute of Standards and Technology
NCE	Navy Calibration Equipment List NA 17–35NCE–1
NCL	Navy Calibration Laboratory
NPSL	Navy Primary Standards Laboratory
NWAD	Naval Warfare Assessment Division
PROC	Procedure

SI	Standard International
SOP	Standard Operating Procedure
SPTE	Special Purpose Test Equipment
TAMS	Test And Monitoring Systems
TAR	Test Accuracy Ratio
TB	Technical Bulletin (Army)
TI	Test Instrument
TMDE	Test, Measurement and Diagnostic Equipment
UUT	Unit Under Test

APPENDIX H

INSTRUMENT CALIBRATION PROCEDURE (ICP) SUBMISSION CHECKLIST

Complete the following (as required). In addition, provide two clear copies of the draft ICP.

Document No.: _____ Document Date: _____

Document Title: _____

Test Instruments Covered: Model No. Mfr. Description

Review Information	Submission Requirements/Remarks
1. Is an ICP or approved calibration procedure for the test instrument listed in the Metrology Requirements List (METRL), NAVAIR 17–35MTL–1 , NAVSEA OD 45845, NAVELEX 0969–LP–133–2010? Yes ☐ No ☐	If yes, provide brief rationale for preparation and use of the ICP.
2. Has MSD been contacted to determine whether a forthcoming ICP or approved calibration procedure will satisfy this document need? Yes ☐ No ☐	Comments:
3. ICP prepared in accordance with: a) MIL–M–38793 Yes ☐ No ☐ b) NAVAIR 17–35TR–4 Yes ☐ No ☐ c) Other :_____	Comments:
4. Does ICP calibrate to manufacturer specifications? Yes ☐ No ☐	If no, identify specific tests and deviation and the rationale for the approach. Include appropriate references, if applicable.

Rev. 8/96

APPENDIX H

INSTRUMENT CALIBRATION PROCEDURE (ICP) SUBMISSION CHECKLIST
(Continued)

Review Information	Submission Requirements/Remarks
5. Are all performance parameters tested? Yes ☐ No ☐	If no, identify parameters not tested and provide the rationale for deleting tasks.
6. ICP provides minimum 4:1 calibration accuracy ratio? Yes ☐ No ☐	If no, identify specific test step and accuracy ratio achieved; also, provide the rationale for using less than 4:1.
7. Documentation used in the development of ICP calibration methods: a) ICP: NA 17–20_____ b) T.O.: AFTO_____ c) T.B.: ATB_____ d) Mfr. Manual: _____ _____ e) Other: _____ _____ f) None	If other or none, provide rationale for selection of calibration method.
8. Documentation used for establishing calibration equipment requirements: a) Navy Calibration Equipment List (NCE): Yes ☐ No ☐ b) Other: _____ _____ c) None	If other or none, provide rationale for selection of non–NCE equipment.

Rev. 8/96

APPENDIX H

INSTRUMENT CALIBRATION PROCEDURE (ICP) SUBMISSION CHECKLIST
(Continued)

Review Information	Submission Requirements/Remarks
9. Bench evaluation of ICP has been performed? Yes ☐ No ☐	If yes, provide completed checklist (copy), and a list of calibration standards used during the evaluation.
10. Technical Manual and/or other information which describes the TI and its performance characteristics is attached? Yes ☐ No ☐ (Date to be returned by) _____ Return not required _____	If yes, provide a copy for temporary load purposes or indicate if material may be retained.
11. Technical point of contact for ICP	Name: _____
12. Comments:	Telephone #: (Comm.) _____ (DSN) _____

Prepared by: _____

Activity: _____

Date: _____

Rev. 8/96